Clamping elements

Clamp straps

slotted heel

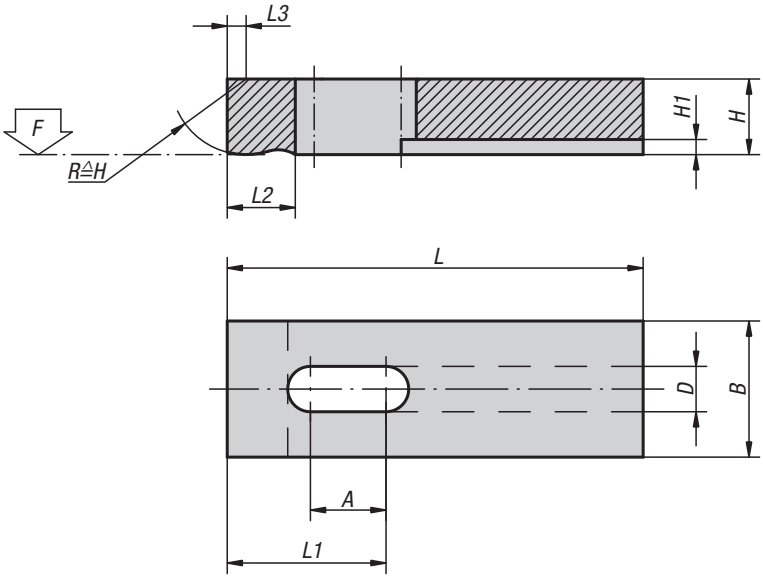

Material:
Carbon steel 1.1191

Version:
Black oxidised.

Sample order:
K0001.101

Note:
For suitable supports and adjustable rest pads, see K0305 and K0306.

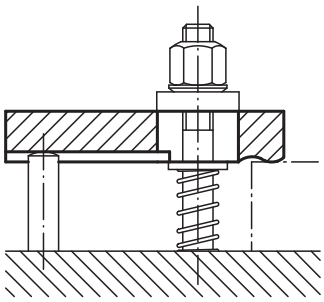

KIPP Clamp straps, slotted heel

Order No.	A	B	D	H	H1	L	L1	L2	L3	F kN
K0001.05	8	12	5,5	8	3	32	14	8	1,2	3,42
K0001.06	10	16	7	10	3	40	17	10	1,6	4,82
K0001.08	12	20	9	12	4	50	22	12	2	8,77
K0001.10	16	25	11	16	4,5	63	28	16	2,5	13,9
K0001.12	20	32	14	20	5	80	35	20	3	20,2
K0001.14	25	40	16	25	6	100	44	25	4	27,6
K0001.16	42	50	18	30	6	160	73	32	5	37,8
K0001.20	52	60	22	30	8	200	92	40	6	58,8
K0001.051	13	12	5,5	8	3	50	23	8	1,2	3,42
K0001.061	17	16	7	10	3	63	29	10	1,6	4,82
K0001.081	21	20	9	12	4	80	37	12	2	8,77
K0001.101	26	25	11	16	4,5	100	46	16	2,5	13,9
K0001.121	33	32	14	20	5	125	58	20	3	20,2
K0001.141	42	40	16	30	6	160	74	25	4	27,6

Clamp straps

assorted, long slot

K0002.01 (0,5 kg)

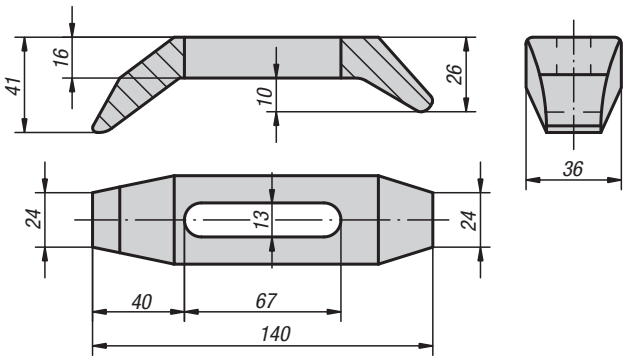

K0002.05 (0,48 kg)

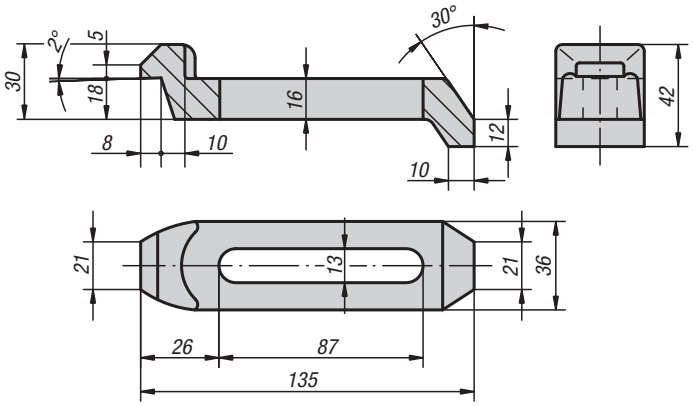

K0002.10 (0,35 kg)

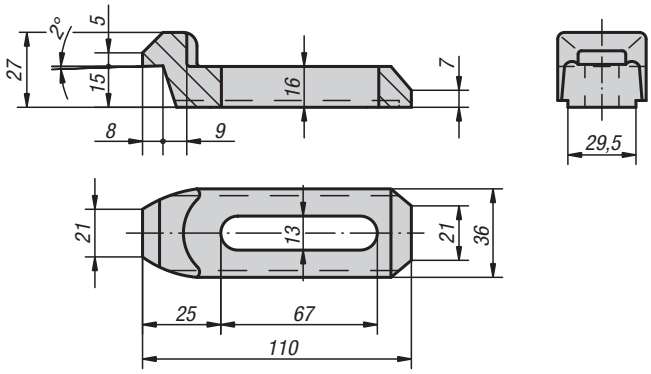

Material:
Carbon steel 1.7225

Version:
Tempered to 1000 N/mm², black oxidised.

Sample order:
K0002.10

Note:
These are the same clamp straps that are used with the adjustment units K0004.

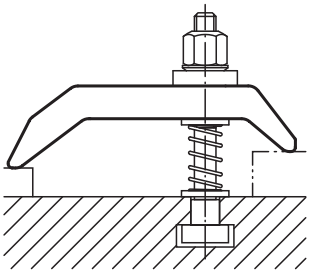

KIPP Clamp straps, assorted, long slot

Order No.	Item
K0002.01	Clamp Strap
K0002.05	Clamp Strap
K0002.10	Clamp Strap

Clamp strap assemblies

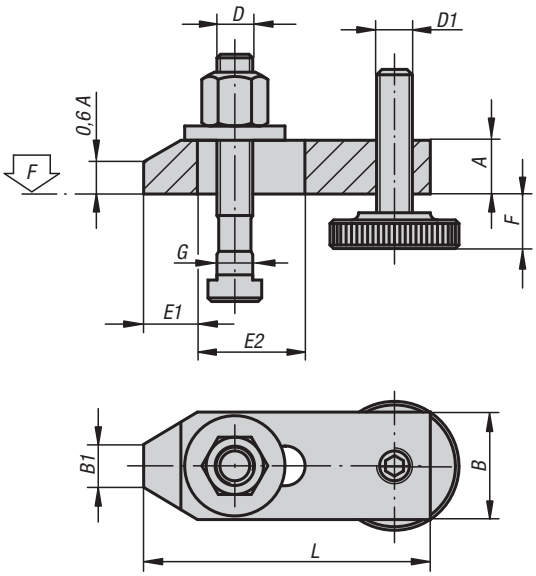

Material:
Carbon steel.
Screws tempered to 8.8.

Version:
Clamp painted. Screws black oxidised.

Sample order:
K0003.1616

Note:
“F” is dependent on the depth of the DIN 650 slot.

KIPP Clamp strap assemblies

Order No.	L	A	B	B1	E1	E2	F	G for T-slot	D	D1	F kN
K0003.1010	80	15	30	12	15	30	8-32	10	M10x80	M10	13,9
K0003.1212	100	20	40	14	21	40	10-40	12	M12x100	M12	20,2
K0003.1214	100	20	40	14	21	40	10-38	14	M12x100	M12	20,2
K0003.1616	125	25	50	18	26	45	13-49	16	M16x125	M16	37,8
K0003.1618	125	25	50	18	26	45	13-46	18	M16x125	M16	37,8
K0003.2020	160	30	60	22	30	60	16-65	20	M20x160	M20	58,8
K0003.2022	160	30	60	22	30	60	16-65	22	M20x160	M20	58,8

Clamp straps

with adjustment unit

Size 1

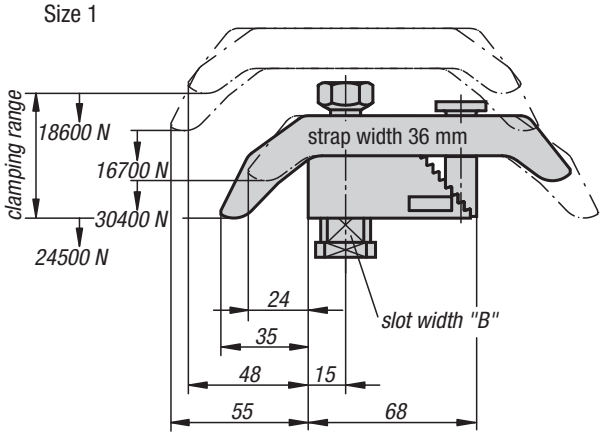

Size 2

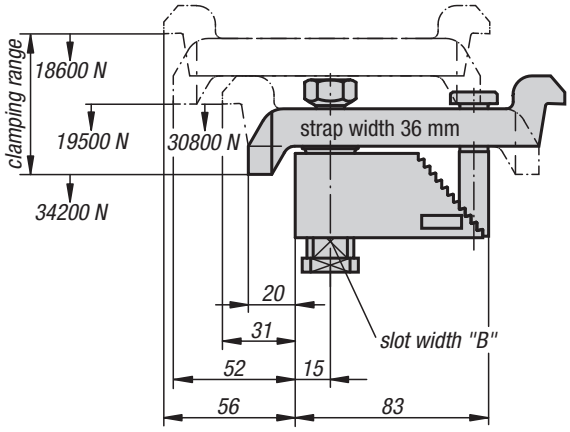

Size 3-5

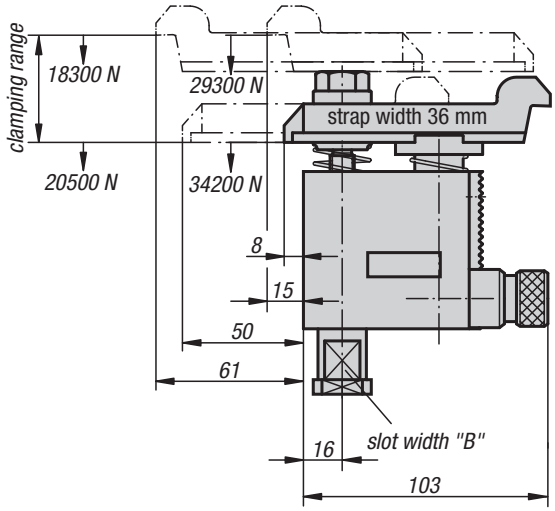

Material:
Base, ductile iron.
Clamp strap and clamping screw carbon steel.

Version:
Black oxidised.

Sample order:
K0004.40X16 (include slot width B)

Note:
These clamp strap modules are universal, flexible clamps constructed from individual components building a compact unit. There are no loose parts which first have to be altered for a clamping operation. The compact design allows these clamps to be placed close to the workpiece enabling the full area of the machine table to be used.

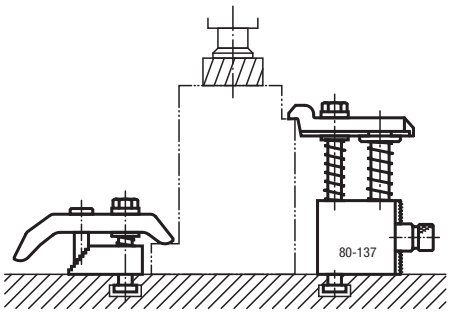

KIPP Clamp straps with adjustment unit

Order No.	Size	Clamp range	Slot width B DIN 650
K0004.10X	1	0-35	12/14/16/18
K0004.20X	2	25-85	12/14/16/18
K0004.30X	3	80-137	12/14/16/18
K0004.40X	4	125-224	12/14/16/18
K0004.50X	5	160-300	12/14/16/18

Hinge pins

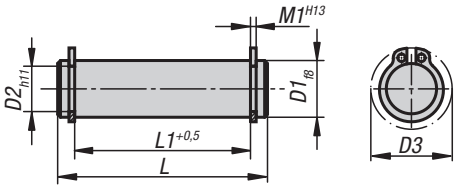

Material:
Carbon steel 1.0503.07

Version:
Tempered and ground, bright.

Sample order:
K0007.08

Note:
For use with:
Cam levers K0008 and K0009.
Eye bolts K0396.
Clevis K0397.
Circlips supplied.

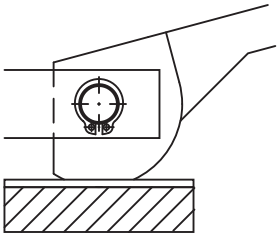

KIPP Hinge pins

Order No.	D1	L	L1	M1	D2	D3
K0007.05	5	18	13	0,7	4,8	10,7
K0007.06	6	22	17	0,8	5,7	12,2
K0007.08	8	30	25	0,9	7,6	15,2
K0007.081	8	20	16	0,9	7,6	15,2
K0007.082	8	27	21	0,9	7,6	15,2
K0007.10	10	37	32	1,1	9,6	17,6
K0007.101	10	25	20	1,1	9,6	17,6
K0007.102	10	35	29	1,1	9,6	17,6
K0007.12	12	46	40	1,1	11,5	19,6
K0007.121	12	31	25	1,1	11,5	19,6
K0007.122	12	37	31	1,1	11,5	19,6
K0007.14	14	44	37	1,1	13,4	22
K0007.16	16	48	41	1,1	15,2	24,4
K0007.18	18	58	51	1,3	17	26,8

Cam levers

single

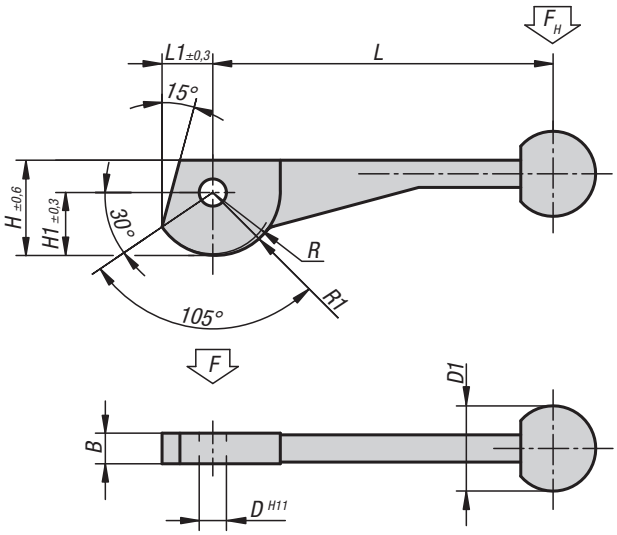

Material:
Carbon steel 1.7220.
Ball grip plastic.

Version:
Tempered and black oxidised.

Sample order:
K0008.10

Note:
Suitable hinge pin, see K0007.
The cam lever is an eccentric lever that moves along a logarithmic spiral. Its clamping properties are even over the entire contact surface of the cam.

Force diagram

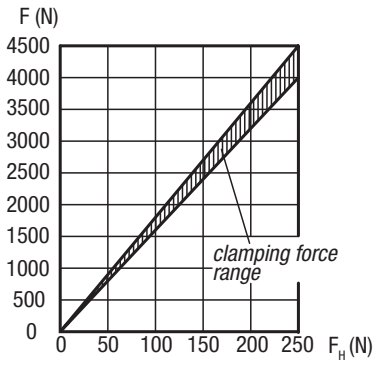

KIPP Cam levers, single

Order No.	L	L1	B	H	H1	D	D1	R	R1
K0008.08	104±2	14,9	9	28,2	18,7	8	25	17,2	19,2
K0008.10	123±2	18,6	12	34,8	23,3	10	30	21,5	24
K0008.12	146±3	24,3	14	43,8	30,3	12	30	28	31,2

Cam levers

double

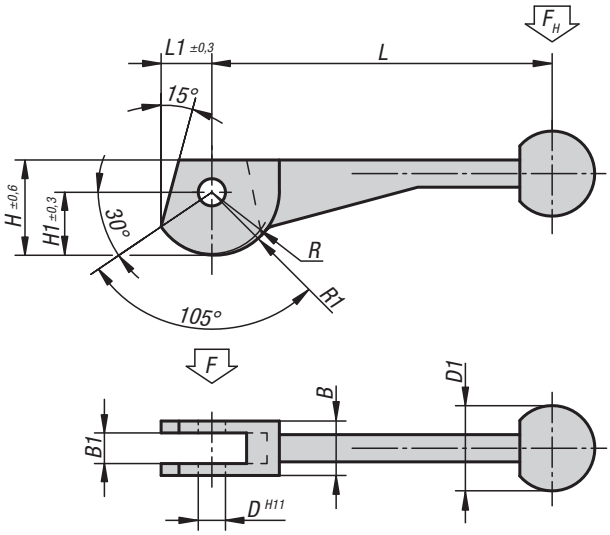

Material:
Carbon steel 1.7220.
Ball grip plastic.

Version:
Tempered and black oxidised.

Sample order:
K0009.12

Note:
Suitable hinge pin, see K0007.
The cam lever is an eccentric lever that moves along a logarithmic spiral. Its clamping properties are even over the entire contact surface of the cam.

Force diagram

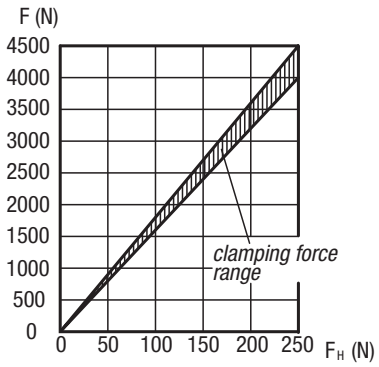

KIPP Cam levers, double

Order No.	L	L1	B	B1	H	H1	D	D1	R	R1
K0009.08	104±2	14,9	16	9	28,2	18,7	8	25	17,2	19,2
K0009.10	123±2	18,6	20	12	34,8	23,3	10	30	21,5	24
K0009.12	146±3	24,3	25	14	43,8	30,3	12	30	28	31,2

Cam clamps

single

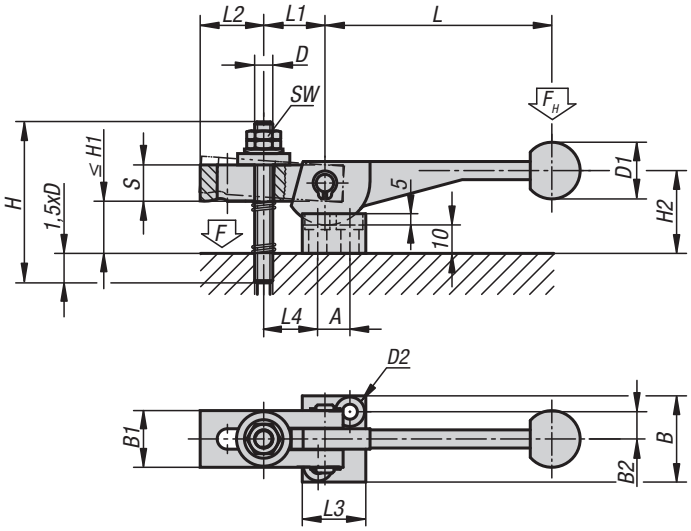

Material:
Cam lever carbon steel 1.7220.
Strap carbon steel 1.1191.

Version:
Black oxidised.

Sample order:
K0010.10

Force diagram

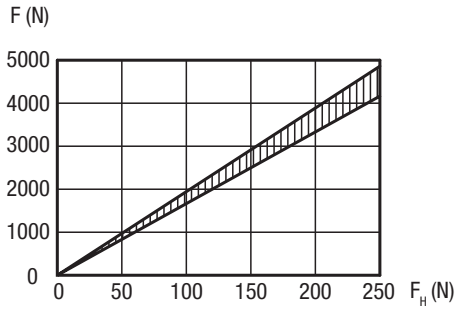

KIPP Cam clamps, single

Order No.	L	L1	L2	L3	L4	B	B1	B2	S	H	H1 max.	H2	D	D1	D2	A	SW
K0010.08	104±2	27	28	28	27	38	25	12	16	70	25	34	M8	25	7	14	13
K0010.10	123±2	34	36	32	35	41	32	13,5	20	80	24	40	M10	30	7	16	17
K0010.12	146±3	43	45	37	45	43	40	14,5	25	100	31	48	M12	30	7	19	19

Cam clamps

double

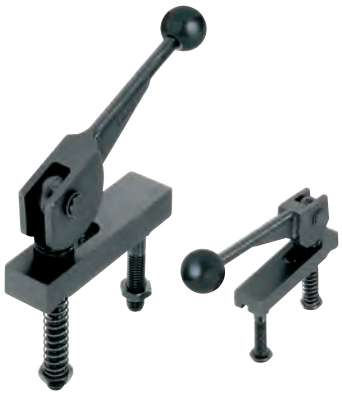

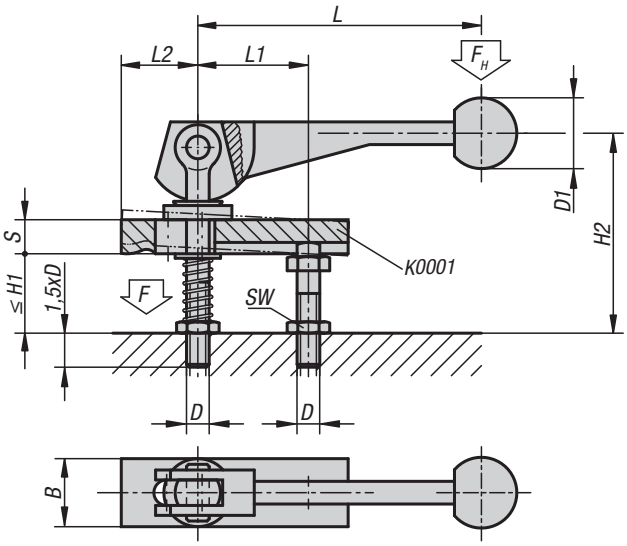

Material:
Cam lever carbon steel 1.7220.
Strap carbon steel 1.1191

Version:
Black oxidised.

Sample order:
K0011.12

Force diagram

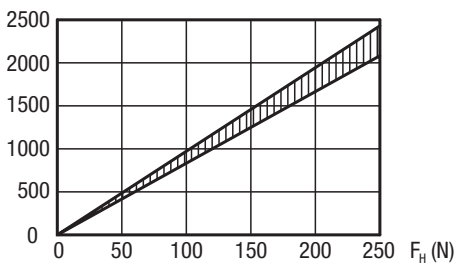

KIPP Cam clamps, double

Order No.	L	L1	L2	B	S	H1 max.	H2	D	D1	SW
K0011.08	104±2	39	37	20	12	28	74	M8	25	13
K0011.10	123±2	49	46	25	16	39	92	M10	30	17
K0011.12	146±3	61	58	32	20	49	120	M12	30	19

Hook clamps

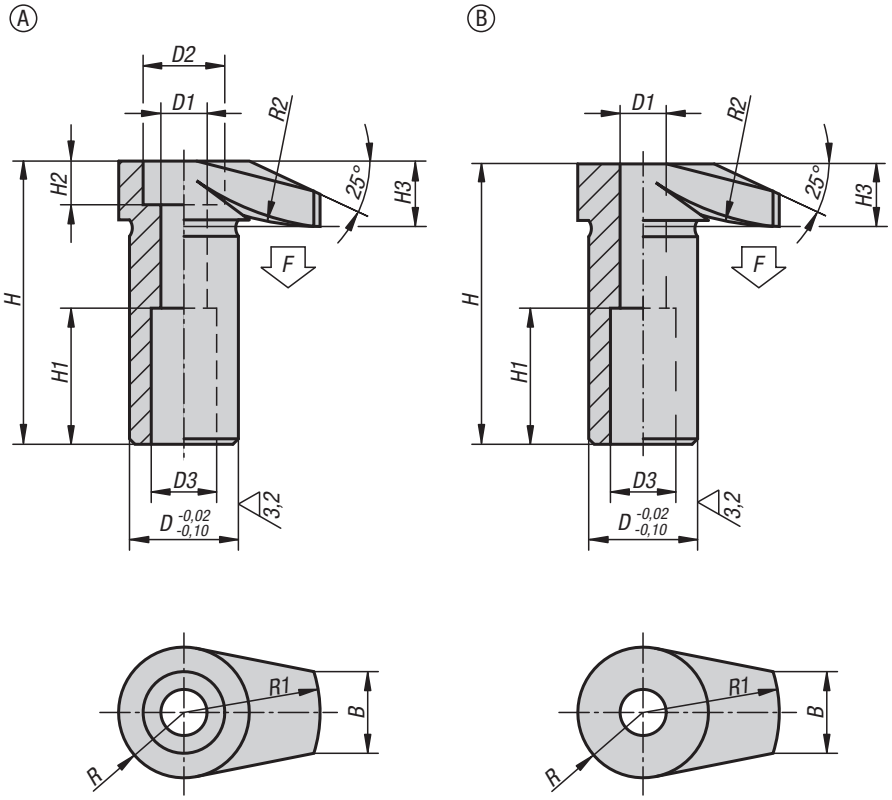

Material:
Carbon steel, tempered.

Version:
Black oxidised.

Sample order:
K0012.10

Accessories:
Springs K1554 and socket head screws K0869.

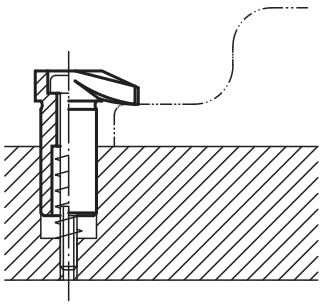

KIPP Hook clamps

Order No.	Form	D	D1	D2	D3	H	H1	H2	H3	B	R	R1	R2	F max. kN
K0012.06	A	16	6,5	11	10	42	20	6	10	11	9	20	30	4,8
K0012.08	A	20	8,5	15	12	52	25	8	12	15	12	25	50	8,8
K0012.10	A	25	10,5	18	14	66	32	10	16	17	14	32	60	13,9
K0012.12	A	32	12,5	20	17	83	40	12	20	20	18	40	80	20,2

Order No.	Form	D	D1	D3	H	H1	H3	B	R	R1	R2	F max. kN
K0012.106	B	16	6,5	10	41,5	20	9,5	11	9	20	30	4,8
K0012.108	B	20	8,5	12	51,5	25	11,5	15	12	25	50	8,8
K0012.110	B	25	10,5	14	65,5	32	15,5	17	14	32	60	13,9
K0012.112	B	32	12,5	17	82,5	40	19,5	20	18	40	80	20,2

Hook clamps

with long hook

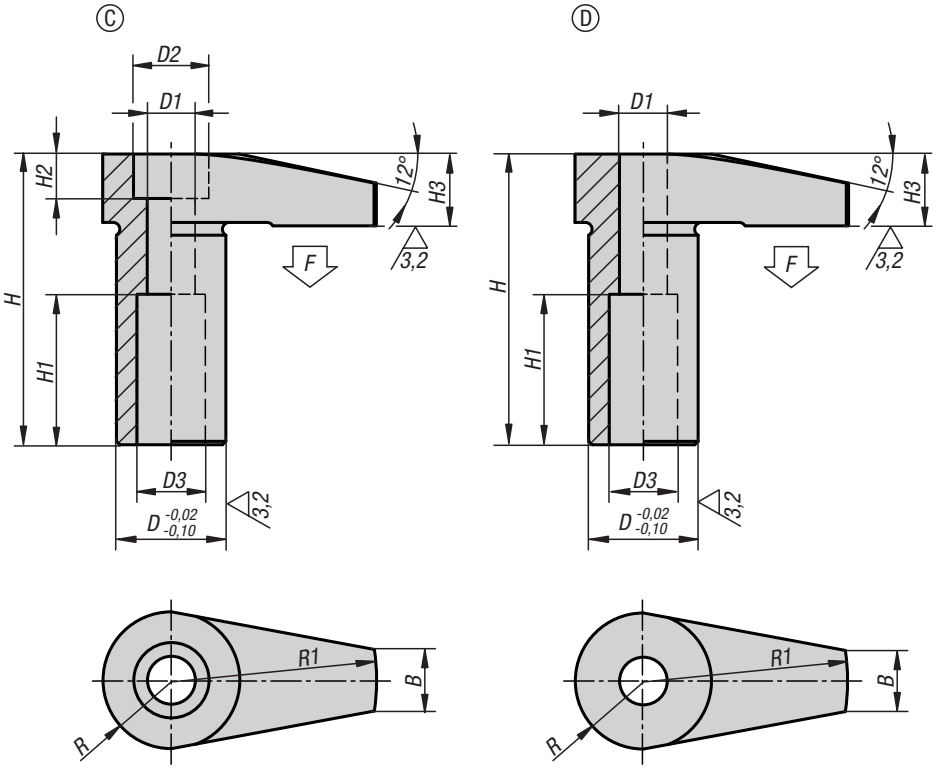

Material:
Carbon steel, tempered.

Version:
Black oxidised.

Sample order:
K0012.406

KIPP Hook clamps with long hook

Order No.	Form	B	D	D1	D2	D3	H	H1	H2	H3	R	R1	F max. kN
K0012.406	C	9	16	7	11	10	42,5	22	6	10,5	10	30	4,5
K0012.408	C	12	20	8,6	15	12	52,5	25	8	12,5	12,5	40	6,5
K0012.410	C	18	25	10,6	18	14	66,5	32	10	16,5	16	50	11,8

Order No.	Form	B	D	D1	D3	H	H1	H3	R	R1	F max. kN
K0012.506	D	9	16	7	10	42,5	22	10,5	10	30	4,5
K0012.508	D	12	20	8,6	12	52,5	25	12,5	12,5	40	6,5
K0012.510	D	18	25	10,6	14	66,5	32	16,5	16	50	11,8

Hook clamps

with soft pad

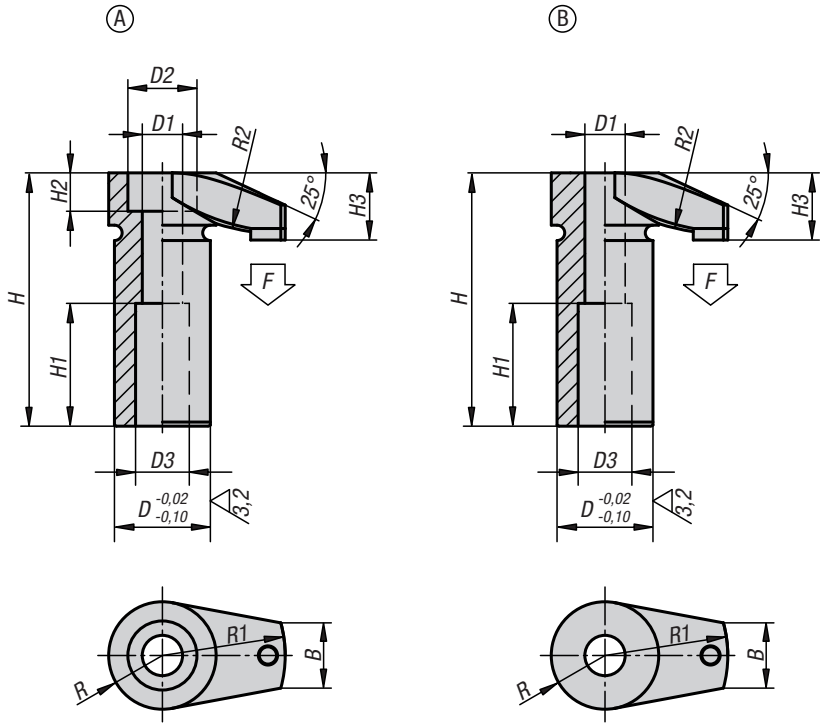

Material:
Carbon steel.
Soft pad POM or polyurethane 99 Shore A.

Version:
Tempered and black oxidised.

Sample order:
K0012.206

Note:
The pressed in plastic inserts offer optimal damage protection for sensitive workpiece faces.

KIPP Hook clamps with soft pad

Order No.	Form	Component material	D	D1	D2	D3	H	H1	H2	H3	B	R	R1	R2	F max. kN
K0012.206	A	polyacetal	16	6,5	11	10	42	20	6	10,5	11	9	20	30	4,8
K0012.208	A	polyacetal	20	8,5	15	12	52	25	8	13,5	15	12	25	50	8,8
K0012.210	A	polyacetal	25	10,5	18	14	66	32	10	17,5	17	14	32	60	11,6
K0012.212	A	polyacetal	32	12,5	20	17	83	40	12	21	20	18	40	80	18,8
K0012.2106	B	polyacetal	16	6,5	-	10	41,5	20	-	10	11	9	20	30	4,8
K0012.2108	B	polyacetal	20	8,5	-	12	51,5	25	-	13	15	12	25	50	8,8
K0012.2110	B	polyacetal	25	10,5	-	14	65,5	32	-	17	17	14	32	60	11,6
K0012.2112	B	polyacetal	32	12,5	-	17	82,5	40	-	21	20	18	40	80	18,8
K0012.306	A	polyurethane	16	6,5	11	10	42	20	6	10,5	11	9	20	30	4,8
K0012.308	A	polyurethane	20	8,5	15	12	52	25	8	13,5	15	12	25	50	8,8
K0012.310	A	polyurethane	25	10,5	18	14	66	32	10	17,5	17	14	32	60	11,6
K0012.312	A	polyurethane	32	12,5	20	17	83	40	12	21	20	18	40	80	18,8
K0012.3106	B	polyurethane	16	6,5	-	10	41,5	20	-	10	11	9	20	30	4,8
K0012.3108	B	polyurethane	20	8,5	-	12	51,5	25	-	13	15	12	25	50	8,8
K0012.3110	B	polyurethane	25	10,5	-	14	65,5	32	-	17	17	14	32	60	11,6
K0012.3112	B	polyurethane	32	12,5	-	17	82,5	40	-	21	20	18	40	80	18,8

Springs

for clamp straps

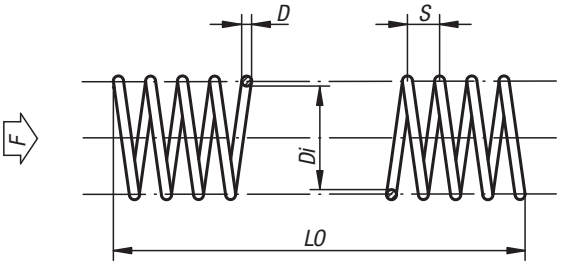

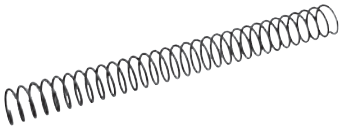

Material:
Spring steel wire EN 10270-1-DH.

Sample order:
K1554.12

Note:
Springs are only available in 400 mm lengths.

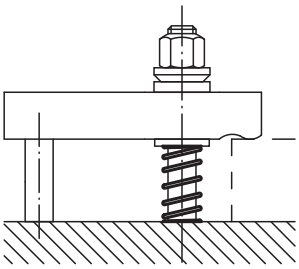

KIPP Springs for clamp straps

Order No.	D	Di	LO	S	Spring force F approx. N	Compression factor under f
K1554.06	1	6,5	400	3	32	1,3
K1554.08	1	8,5	400	4	25	2,1
K1554.10	1,2	10,5	400	4	35	2,7
K1554.12	1,4	12,5	400	5	47	3,3
K1554.14	1,5	14,5	400	6	50	4
K1554.16	1,6	16,5	400	7	53	4,8
K1554.18	1,8	18,5	400	7	68	5,4
K1554.20	1,8	20,5	400	8	62	6,5
K1554.24	2	25	400	9	70	8,6

Hook clamps

with collar

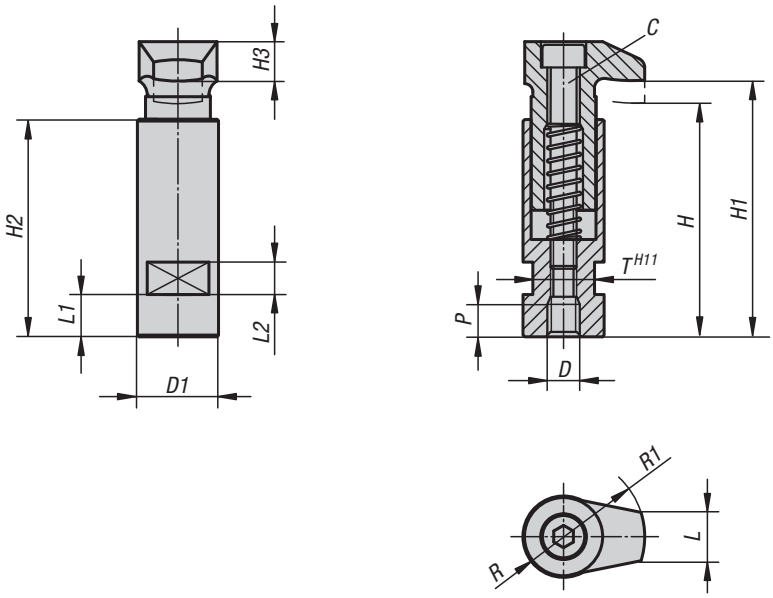

Material:
Carbon steel.

Version:
Tempered and black oxidised.

Sample order:
K0013.06

KIPP Hook clamps with collar

Order No.	C	D	D1	H	H1	H2	H3	L	L1	L2	P	R	R1	T	Clamping force kN
K0013.06	M6	M6	20	56	60	53	10	11	9	8	8	9	20	17	4,82
K0013.08	M6	M8	20	56	60	53	10	11	9	8	8	9	20	17	8,77
K0013.10	M8	M10	25	72	79	67	12	15	13	10	10	12	25	19	13,9
K0013.12	M10	M12	32	88	96	82	16	17	18	12	12	14	32	27	20,2
K0013.16	M12	M16	40	109	118	102	20	20	22	12	16	18	40	32	37,8

Hook clamps ground

Form A/B/C

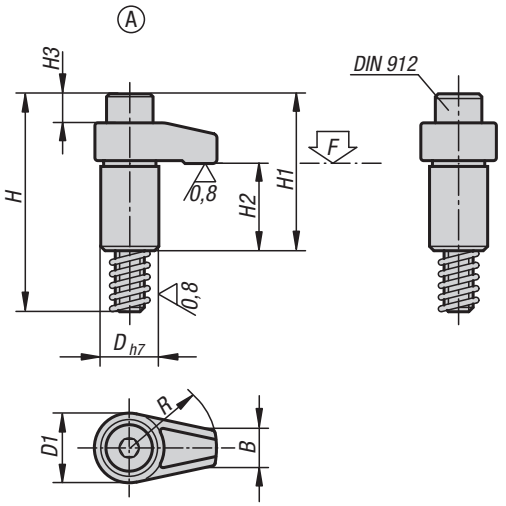

Material:
Carbon steel, tempered.

Version:
Black oxidised. Shaft OD ground.

Sample order:
K0014.216040

Note:
The stated clamping forces (F max.) and tightening torques are valid within the stated clamping ranges (H5).

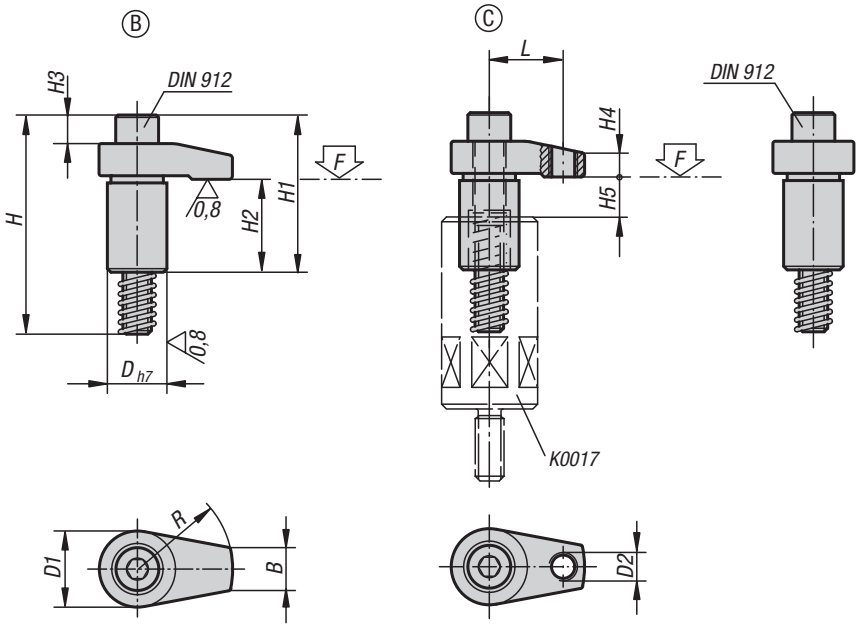

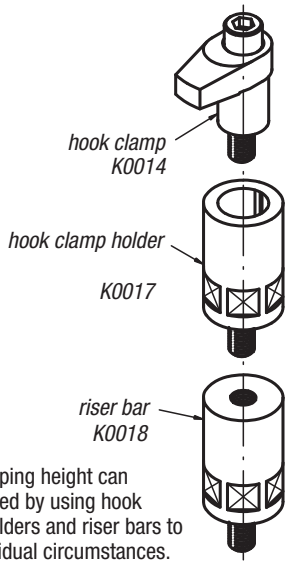

The clamping height can be adjusted by using hook clamp holders and riser bars to suit individual circumstances.

KIPP Hook clamps, ground, Form A/B/C

Order No.	Form	D	D1	D2	H	H1	H2	H3	H4	H5 max. clamping range	B	L	R	Socket head screw DIN 912	Tightening torque max. Nm	F max. kN
K0014.110030	A	20	25	-	75	54	30	9	10	12	12	-	30	M10x65	37,2	13
K0014.110040	A	20	25	-	75	54	30	9	10	12	12	-	40	M10x65	31,4	9,8
K0014.208020	B	18	22	-	58	37	23	2	7	10	10	-	20	M8x50	37,2	13,6
K0014.208025	B	18	22	-	58	37	23	2	7	10	10	-	25	M8x50	32,3	10,9
K0014.208030	B	18	22	-	58	37	23	2	7	10	10	-	30	M8x50	29,4	9
K0014.212040	B	25	32	-	92	66	39	11	12	15	18	-	40	M12x80	58,8	17,5
K0014.212050	B	25	32	-	92	68	39	11	12	15	18	-	50	M12x80	49	14
K0014.212060	B	25	32	-	92	68	39	11	12	15	18	-	60	M12x80	45,1	11,6
K0014.216040	B	32	36	-	101	75	39	15	15	15	22	-	40	M16x85	166,6	37,9
K0014.216050	B	32	36	-	101	75	39	15	15	15	22	-	50	M16x85	147	30,4
K0014.216060	B	32	36	-	101	75	39	15	15	15	22	-	60	M16x85	127,4	25,2
K0014.312140	C	25	32	M12	92	66	39	11	10	15	18	31	40	M12x80	58,8	22,6
K0014.312150	C	25	32	M12	92	68	39	11	13	15	18	38	50	M12x80	49	18,5
K0014.312160	C	25	32	M12	92	68	39	11	13	15	18	46	60	M12x80	45,1	15,2
K0014.316150	C	32	36	M12	101	75	39	15	16	15	22	38	50	M16x85	147	38
K0014.316160	C	32	36	M12	101	75	39	15	16	15	22	46	60	M16x85	127,4	33

Hook clamps

with collar

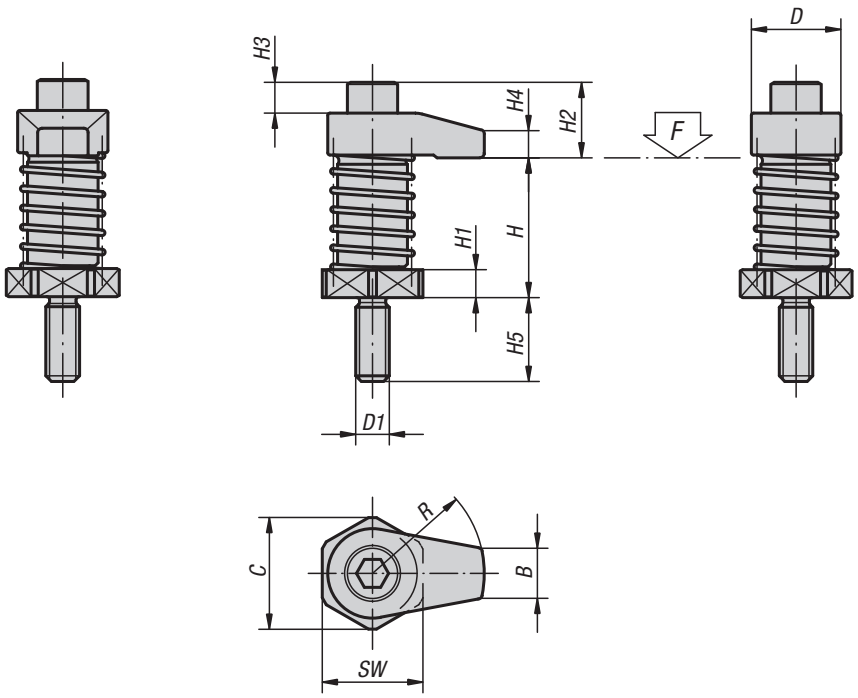

Material:
Hook clamps and hook clamp holders carbon steel, tempered.

Version:
Black oxidised.

Sample order:
K0015.12060

Note:
Hook clamps with collar can be screwed directly into grid holes etc. without counterbore.
For suitable riser elements, see riser bars K0018.

KIPP Hook clamps with collar

Order No.	D	D1	H clamping range	H1	H2	H3	H4	H5	B	C	R	SW	Tightening torque max. Nm	F max. kN
K0015.08020	22	M8	35 - 45	6	14	2	7	19	10	25	20	22	20	7,9
K0015.08025	22	M8	35 - 45	6	14	2	7	19	10	25	25	22	20	7,3
K0015.08030	22	M8	35 - 45	6	14	2	7	19	10	25	30	22	20	6,7
K0015.08120	22	M8	45 - 55	16	14	2	7	19	10	25	20	22	20	7,9
K0015.08125	22	M8	45 - 55	16	14	2	7	19	10	25	25	22	20	7,3
K0015.08130	22	M8	45 - 55	16	14	2	7	19	10	25	30	22	20	6,7
K0015.12040	32	M12	50 - 65	10	27	11	10	30	18	40	40	36	45	13,5
K0015.12050	32	M12	50 - 65	10	29	11	12	30	18	40	50	36	45	12,6
K0015.12060	32	M12	50 - 65	10	29	11	12	30	18	40	60	36	45	11,7
K0015.12140	32	M12	65 - 80	25	27	11	10	30	18	40	40	36	45	13,5
K0015.12150	32	M12	65 - 80	25	29	11	12	30	18	40	50	36	45	12,6
K0015.12160	32	M12	65 - 80	25	29	11	12	30	18	40	60	36	45	11,7
K0015.16040	36	M16	50 - 65	10	36	15	15	30	22	40	40	36	60	13,4
K0015.16050	36	M16	50 - 65	10	36	15	15	30	22	40	50	36	60	12,4
K0015.16060	36	M16	50 - 65	10	36	15	15	30	22	40	60	36	60	12
K0015.16140	36	M16	65 - 80	25	36	15	15	30	22	40	40	36	60	13,4
K0015.16150	36	M16	65 - 80	25	36	15	15	30	22	40	50	36	60	12,4
K0015.16160	36	M16	65 - 80	25	36	15	15	30	22	40	60	36	60	12

Hook clamps

with mounting bracket

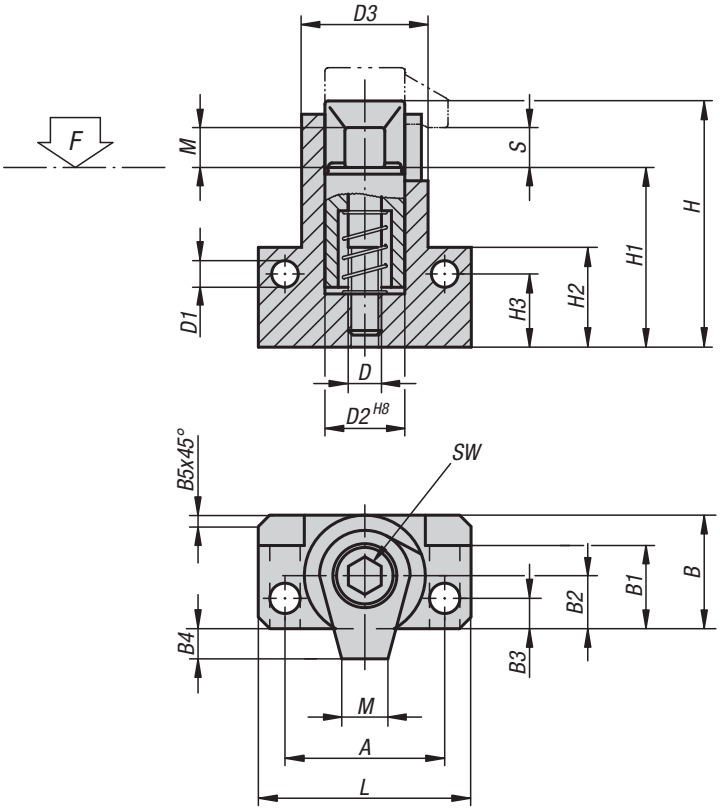

Material:
Hook clamps and clamping screw carbon steel, tempered.

Version:
Black oxidised.

Sample order:
K0016.12

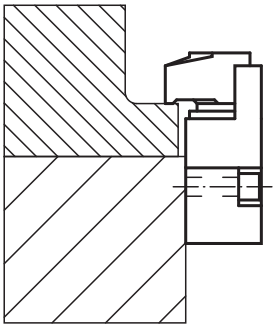

KIPP Hook clamps with mounting bracket

Order No.	D	D1	D2	D3	A	B	B1	B2	B3	B4	B5	H	H1	H2	H3	L	M	S	SW	Tightening torque max. Nm	F max. kN
K0016.08	M8	6,4	20	28	38	26	19,5	12	6	6	2,5	62	47,5	25	18	50	10	4	6	30	17
K0016.10	M10	8,4	24	34	48	31	22,5	14	7,5	9	3	74	57,5	30	21	64	12	5	8	50	18
K0016.12	M12	10,5	28	40	55	36,5	26	16,5	9	10,5	3,5	87	67	35	24	75	15	5	10	60	20
K0016.16	M16	12,8	34	48	65	43,5	31	19,5	10	16,5	4	112	87	45	32	88	20	5	14	120	24

Hook clamp holders

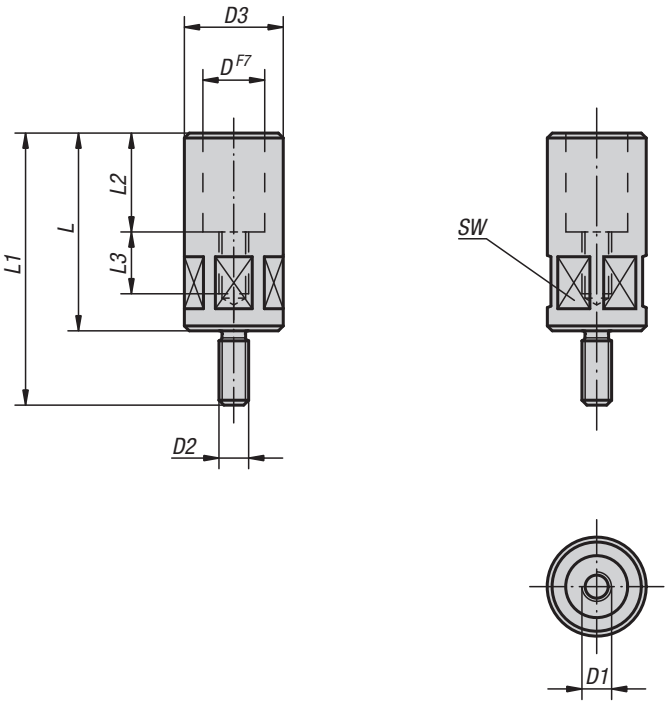

Material:
Carbon steel.

Version:
Black oxidised.

Sample order:
K0017.12080

Note:
Hook clamp holders are for holding and raising hook clamps.

KIPP Hook clamp holders

Order No.	D	D1	D2	D3	L	L1	L2	L3	SW	Tightening torque max. Nm
K0017.08055	18	M8	M8	24	55	74	25	20	22	29,4
K0017.10063	20	M10	M12	32	63	93	30	21	30	39,2
K0017.10080	20	M10	M12	32	80	110	30	23	30	39,2
K0017.12080	25	M12	M12	40	80	110	40	25	36	49
K0017.12100	25	M12	M12	40	100	130	40	28	36	49
K0017.16080	32	M16	M16	50	80	110	40	25	46	78,4
K0017.16100	32	M16	M16	50	100	130	40	28	46	78,4

Riser bars

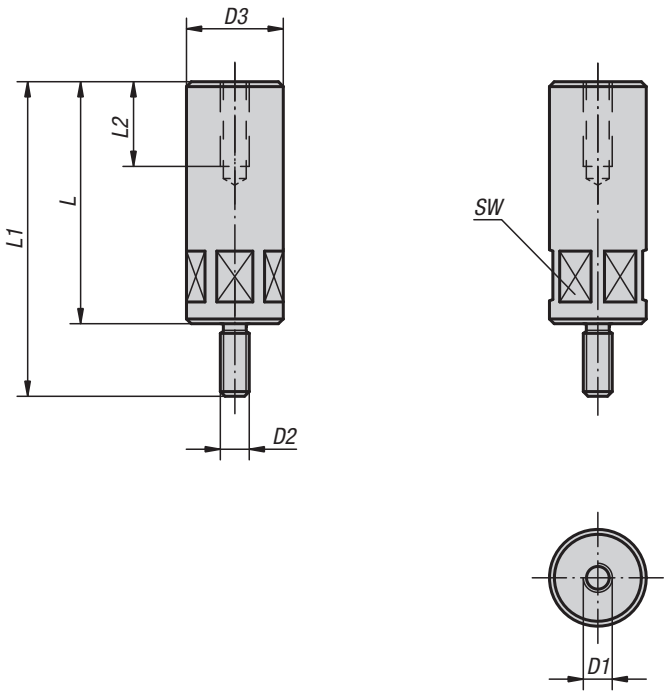

Material:
Carbon steel.

Version:
Black oxidised.

Sample order:
K0018.16050

Note:
The height of the hook clamps and hook clamp holders can be raised using these riser bars.

KIPP Riser bars

Order No.	D1	D2	D3	L	L1	L2	SW	Tightening torque max. Nm
K0018.08032	M8	M8	24	32	51	20	22	29,4
K0018.08040	M8	M8	24	40	59	20	22	29,4
K0018.08050	M8	M8	24	50	69	20	22	29,4
K0018.08065	M8	M8	24	65	84	20	22	29,4
K0018.12050	M12	M12	40	50	80	35	36	49
K0018.12065	M12	M12	40	65	95	35	36	49
K0018.12080	M12	M12	40	80	110	35	36	49
K0018.12100	M12	M12	40	100	130	35	36	49
K0018.12125	M12	M12	40	125	155	35	36	49
K0018.12160	M12	M12	40	160	190	35	36	49
K0018.12200	M12	M12	40	200	230	35	36	49
K0018.16050	M16	M16	50	50	80	35	46	78,4
K0018.16065	M16	M16	50	65	95	35	46	78,4
K0018.16080	M16	M16	50	80	110	35	46	78,4
K0018.16100	M16	M16	50	100	130	35	46	78,4
K0018.16125	M16	M16	50	125	155	35	46	78,4
K0018.16160	M16	M16	60	160	190	35	55	78,4
K0018.16200	M16	M16	60	200	230	35	55	78,4

Swing clamps

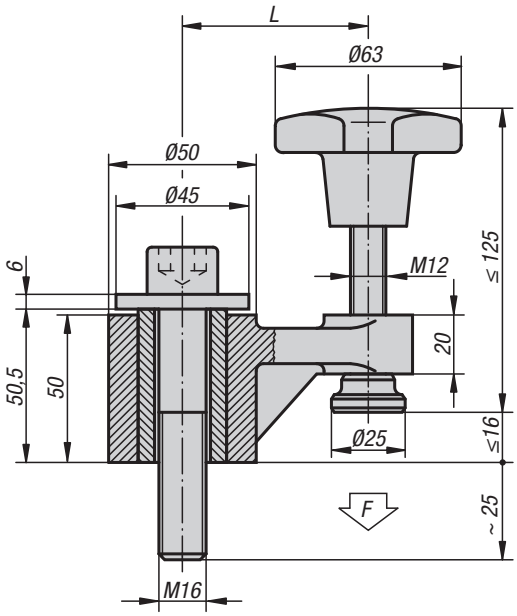

Material:
Body malleable iron.
Sleeve carbon steel 1.1191.
Screw carbon steel 1.1181.
Thrust pad mild steel 1.0301.

Version:
Painted.
Thrust pads case-hardened.

Sample order:
K0019.01

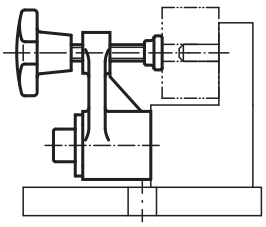

KIPP Swing clamps

Order No.	L	Clamping force N
K0019.01	63	5000
K0019.02	100	3000

Clamping element “actima”

View from below

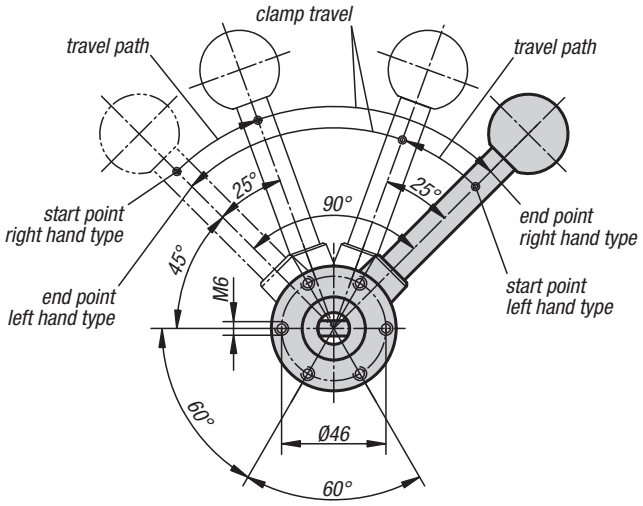

Material:
Steel.
Housing thermoplastic.
Ball knob thermoset PF 31.
Accessories steel.

Version:
Black oxidised.
Housing black.
Ball knob, red.
Accessories black oxidised.

Sample order:
K0020.10

Note:
The travel path is 10 mm. Self-locking occurs in any position within only 2 mm of clamp travel, so workpieces with tolerances of up to 1.5 mm can be safely clamped. The Actima clamping device can be mounted in any horizontal or vertical position.
Standard parts enable further applications and are available as optional accessories.
All parts of the cam system subject to heavy loads are case-hardened (thrust sleeve and accessories only if specified).
The maximum permissible clamping force is approximately 4905 N.

drilled through

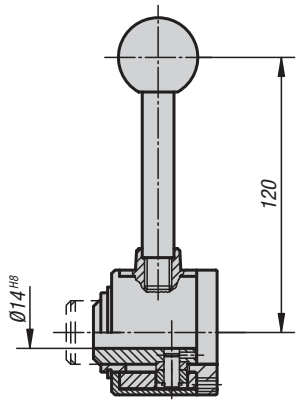

with transverse axis in bore

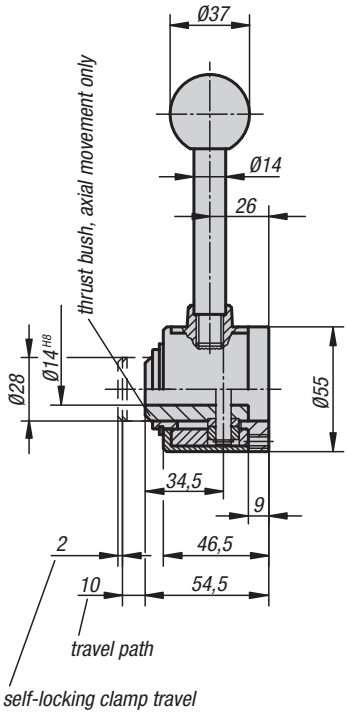

clamping cam

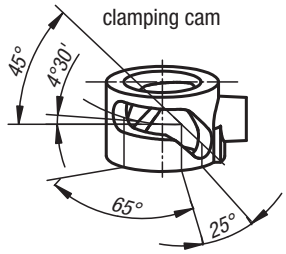

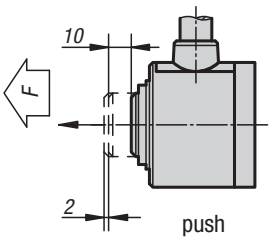

push

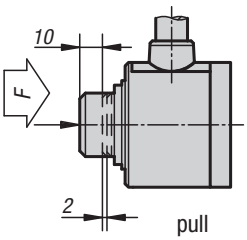

pull

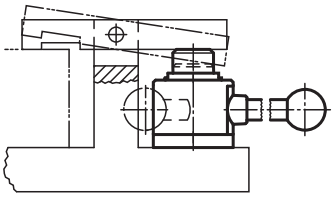

Clamping element “actima”

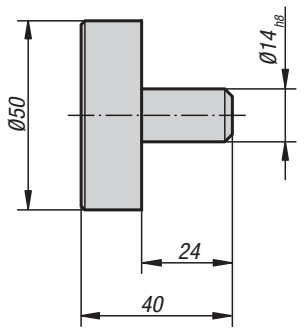

plate

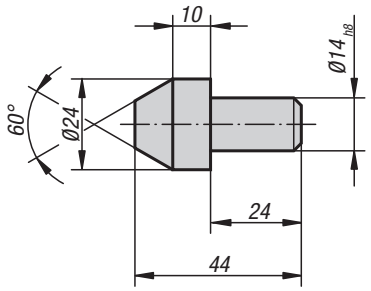

conus

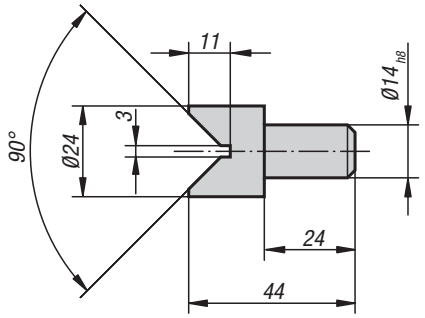

prism

KIPP “actima” clamping element with transverse axis in bore

Order No.	Version
K0020.10	right-hand / thrust
K0020.15	right-hand / pull
K0020.20	left-hand / thrust
K0020.25	left-hand / pull

KIPP “actima” clamping element with drilled through bore

Order No.	Version
K0020.30	right-hand / thrust
K0020.35	right-hand / pull
K0020.40	left-hand / thrust
K0020.45	left-hand / pull

KIPP “actima” accessories

Order No.	Item
K0020.02	Plate
K0020.03	Conus
K0020.04	Prism

Clamping element “arness”

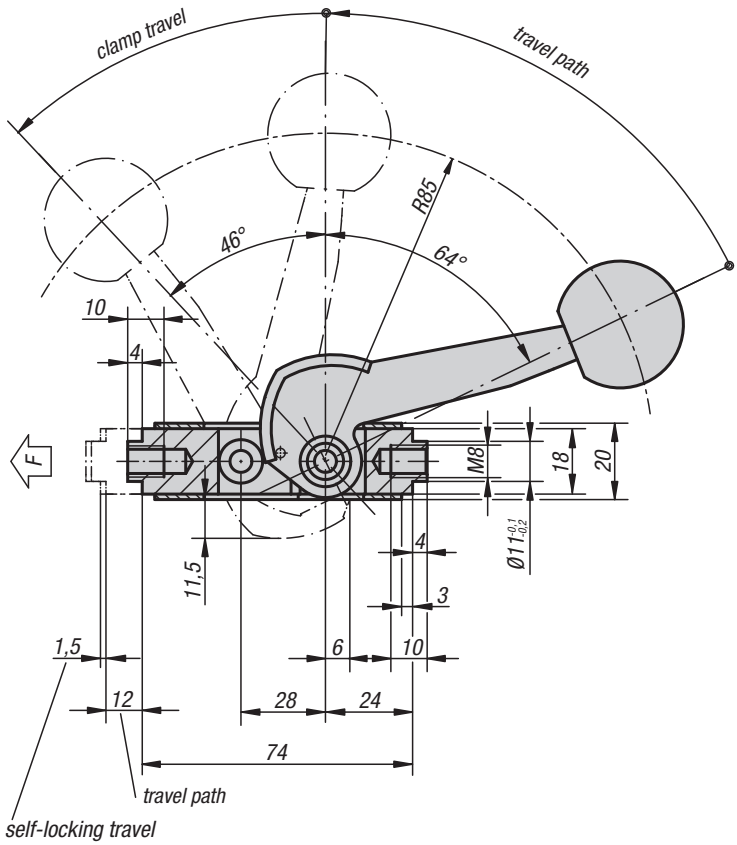

Material:
Steel.
Ball knob thermoset PF 31

Version:
Housing painted silver-grey hammertone.
All other parts and accessories black oxidised.
Ball knob red.

Sample order:
K0021.01

Note:
The travel path is 12 mm. Self-locking occurs in any position within only 1.5 mm of clamp travel, allowing workpieces with tolerances of up to 1 mm to be securely clamped. The arness clamping element can be fitted in any horizontal or vertical position.
Several standard parts have been developed to achieve individual adaptation for various circumstances and are available as optional accessories.
The thrust pad and all parts of the cam system subject to heavy loads are case-hardened.
The maximum permissible clamping force is approximately 4905 N.

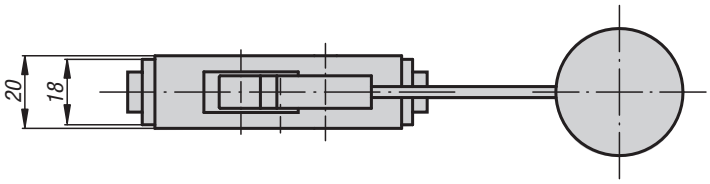

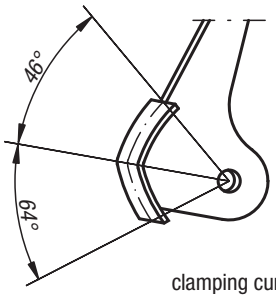

clamping curve

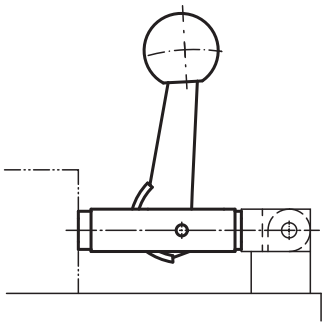

KIPP Clamping element “arness”

Order No.	Dimensions
K0021.01	see drawing

Clamping element “arness”

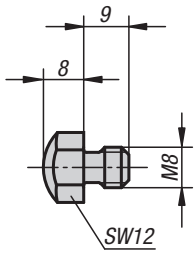

thrust pad

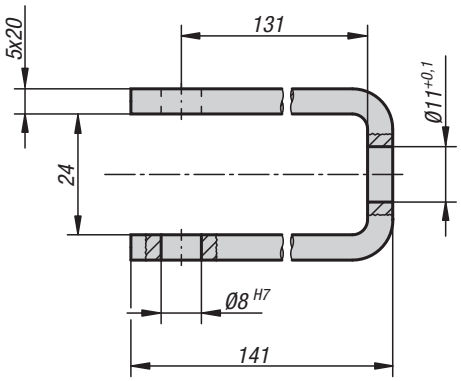

tension bracket

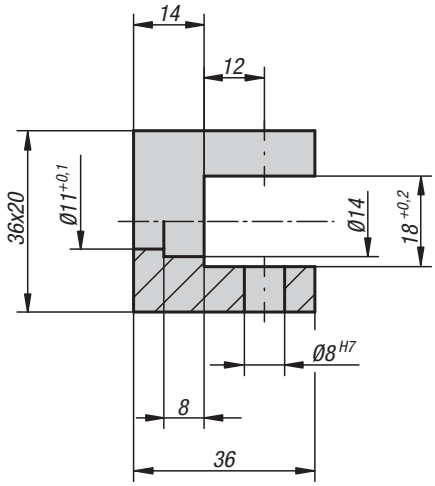

clevis

KIPP “arness” accessories

Order No.	Item
K0021.02	Clevis
K0021.03	Tension Bracket
K0021.04	Thrust Pad

Clamp cam brass

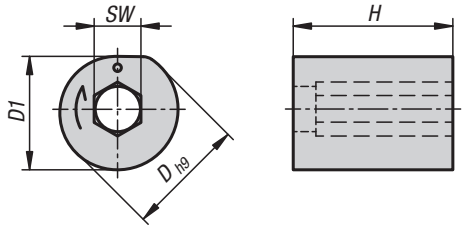

Material:
Brass.

Sample order:
K1457.0808

Application:
These clamping cams are used to fixate components in workpieces.
The clamped components can be easily and quckly released again.
Workpieces and components can be acurately positioned in an assembly.

Advantages:
Using the cam clamps often saves the need for complex cross holes for clamping screws.
The bore for the clamping cam can be produced cost-effectively in the same machine set-up as the bore or slot for the component to be clamped.

Functional principle:
Insert the component to be clamped and the clamping cam into the workpiece. The indent mark on the clamp cam top face should be adjacent the part to be clamped.
The clamp cam is rotated with an hex key in the direction of the arrow.
The part can be released again by turning the cam in the opposite direction.

Drawing reference:
1) Clamping edge
2) 8 H9 min. depth 8

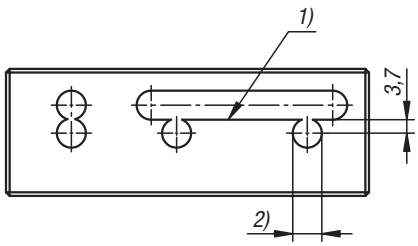

KIPP Clamp cam brass

Order No.	D	D1	H	SW
K1457.0808	8	7,5	8	3

Fixture clamps machinable

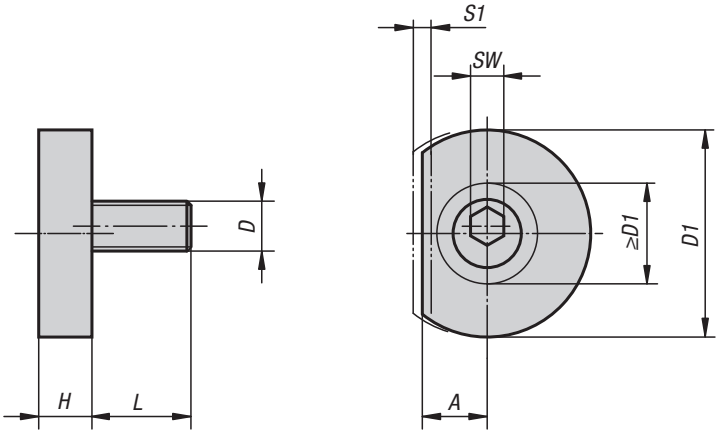

Material:
Cam screw alloyed steel.
Clamping disc steel.

Version:
Cam screw and clamping disc black oxidised.

Sample order:
K0022.06

Note:
These fixture clamps have a round washer that can be machined to suit the contour of the workpiece being clamped. This allows positive clamping for round, contoured or fragile workpieces. The flat edge is the same distance from the screw centre as our hexagonal fixture clamps K0026 allowing an interchange between the two.

"A" = distance from workpiece to screw centre (cam screw).
"D1 min." = maximum depth of contour.

On request:
Replacement cam screws.

KIPP Fixture clamps machinable

Order No.	A	D	D1	D1 min.	H	L	SW	S1 (travel)	Clamping force kN
K0022.06	7,8	M6	24,9	12,1	6,4	11,9	4	1,01	3,3
K0022.10	10,2	M10	31,2	17,2	8,9	18	7	1,52	8,9
K0022.12	12,7	M12	37,6	22,4	11,4	22,9	8	2,03	17,8
K0022.16	15	M16	43,9	26,1	14	28,6	12	2,54	26,7

Fixture clamps unequal hexagon

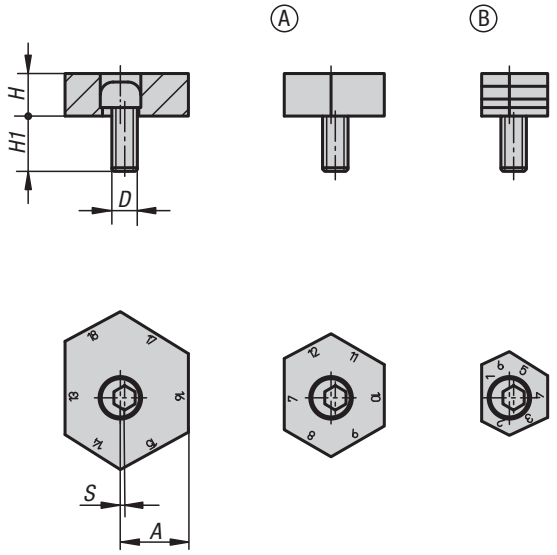

Material:
Cam screw steel tempered to 10.9.
Hexagon washer mild steel.

Version:
Cam screw black oxidised.
Hexagon washer hardened and black oxidised.

Sample order:
K0023.13

Note:
Theses unequal hexagon fixture clamps can minimise the cost of clamping in fixtures. The clamping range can be altered up to 17 mm from the same tapped hole. Simply rotate the hexagon washer.
The washers are available with smooth edges for machined faces or with serrated edges for rough faces.

On request:
Replacement cam screws.

KIPP Fixture clamps unequal hexagon

Order No. Form A smooth	Order No. Form B serrated	Distance A by face No.	D	H	H1	S (cam travel)	Clamping force kN
K0023.09	**K0023.13**	1/12, 2/13, 3/14, 4/15, 5/16, 6/17	M12	10	22	1	18
K0023.10	**K0023.14**	7/18, 8/19, 9/20, 10/21, 11/22, 12/23	M12	10	22	1	18
K0023.11	**K0023.15**	13/24, 14/25, 15/26, 16/27, 17/28, 18/29	M12	10	22	1	18

Spiral cam screws

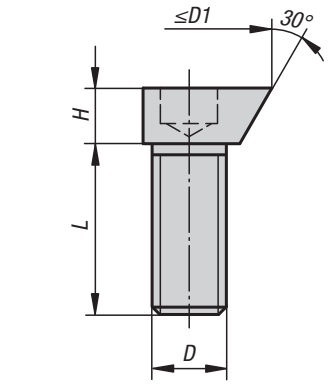

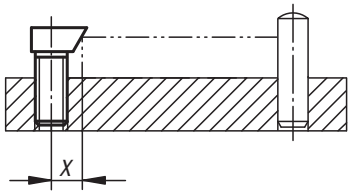

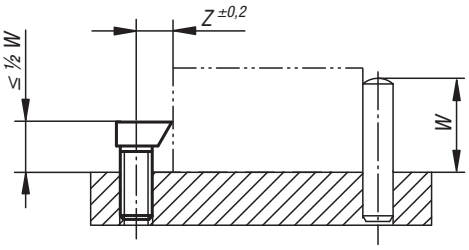

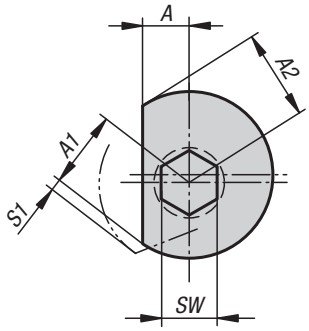

Material:
Steel.

Version:
Case-hardened (56 ±1 HRC) and blue electro zinc-plated.
Grade 8.8

Sample order:
K0024.0408

Note:
Robust, compact spiral cam clamping screws that exert a positive down force on diverse workpiece forms.

Assembly:
Drill and tap several holes at a distance X or Z (see diagram). Screw the cam screw into the required height and position with the flat side to the workpiece. Position the workpiece and tighten the cam screw with a hexagon key. Full clamping is achieved with approximately a 1/3 rotation. Lubricate the tapped hole regularly.

Place stops on the face towards which the screw turns to prevent the workpiece rotating away.

On request:
Spiral cam screws with LH thread.

Drawing reference:
1) clamping sheet metal
2) clamping round parts

1)

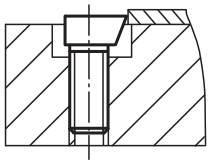

2)

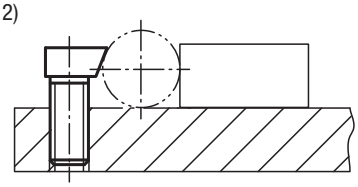

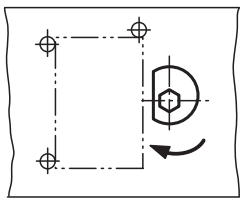

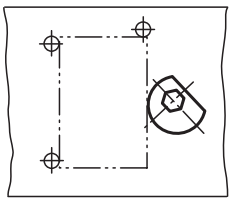

KIPP Spiral cam screws

Order No.	A	A1	A2	D	D1 max.	H	L	SW	S1 (travel)	X	Z	Clamping force kN	Tightening torque max. Nm
K0024.0408	3	4,6	4	M4	9,2	3	8	2,5	0,6	3,5	4,2	0,09	1,5
K0024.0510	3,5	5,7	5	M5	11,4	4	10	3	0,7	4,2	5,2	0,1	2
K0024.0612	4,5	7,1	6,1	M6	14,2	5	12	4	1	5,4	6,4	0,3	4,5
K0024.0816	5,5	8,9	7,7	M8	18	6	16	5	1,2	6,6	8	2,7	20
K0024.1020	6,5	11,1	9,4	M10	22,2	7	20	6	1,7	8,3	9,8	4	30
K0024.1224	8	13,5	11,6	M12	27	9	24	8	1,9	10,1	12	5,4	44

Cam screws

with knife edge washer

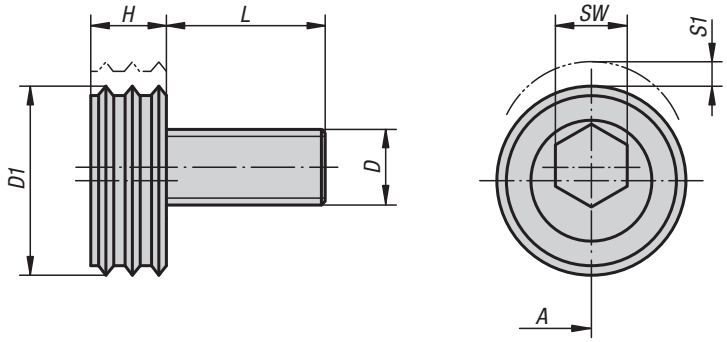

Material:
Knife edge washer.
Cam screw carbon steel.

Version:
Cam screw tempered to 10.9 and black oxidised.
Knife edge washer hardened and anodised.

Sample order:
K0025.16

Note:
Also called knife edge clamps.
The hardened knife edge washer is suitable for clamping rough cut stock, castings, forgings etc.

"A" = distance from workpiece to screw centre (cam screw).

On request:
Replacement cam screws.

KIPP Cam screws with knife edge washer

Order No.	A	D	D1	L	H	SW	S1 (travel)	Clamping force kN	Tightening torque max. Nm
K0025.12	12,7	M12	25,4	22,5	9,6	8	2	18	88
K0025.16	15	M16	30,1	26,8	12,7	12	2,5	27	135

Cam screws

with hexagon washer

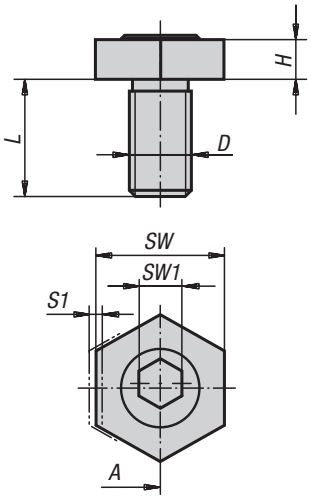

Material:
Cam screw carbon steel.
Hex washer brass.

Version:
Cam screw tempered to 10.9 and black oxidised.

Sample order:
K0026.12

Note:
Also called fixture clamps.
The minimal height of this fixture clamp allows numerous clamping problems in fixture and equipment construction to be solved. The brass hex washer offers a gentle yet extremely stable and safe clamping of workpieces. By using several fixture clamps entire pallets can be set-up.

"A" = distance from workpiece to screw centre (cam screw).

On request:
Replacement cam screws.

KIPP Cam screws with hexagon washer

Order No.	A	D	H	L	SW	SW1	S1 (travel)	Clamping force kN	Tightening torque max. Nm
K0026.04	3,8	M4	2,8	10	8	3	0,8	0,9	2,2
K0026.06	7,8	M6	4,8	12	16	4	1	3,4	8,5
K0026.08	10,2	M8	4,8	15	20,6	5	1	3,6	11,3
K0026.10	10,2	M10	6,4	20	20,6	7	1,6	9,0	28,06
K0026.12	12,7	M12	9,5	25	25,4	8	2	18,0	88
K0026.16	15	M16	12,7	30	30,2	12	2,5	27,0	135

Application using fixture clamps

Notes

Cam screws

with hexagon washer, for T-slots

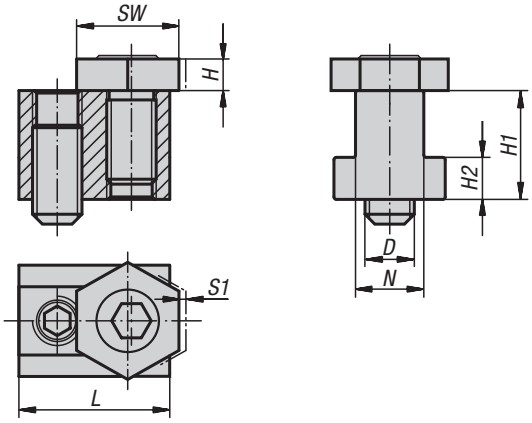

Material:
Carbon steel.
Hex washer brass.

Version:
Tempered to 10.9 and black oxidised.

Sample order:
K0027.12

Note:
Also called fixture clamps for T-slots.
These fixture clamps can be used directly on machine tables or other tables with T-slots. The grub screw at the rear locks the T-nut in the slot. Thin shims are recommended to prevent marking the bottom of the T-slot.

On request:
Replacement cam screws.

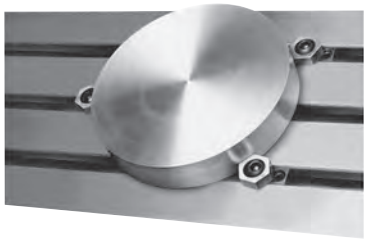

KIPP Cam screws with hexagon washer, for T-slots

Order No.	D	N	H	H1	H2	L	SW	S1 (travel)	Clamping force kN
K0027.08	M6	8	4,8	9,6	4,5	23	16	1	3,4
K0027.10	M6	10	4,8	14	4,5	23	16	1	3,4
K0027.12	M8	12	4,8	15,5	6,5	28	21	1	3,6
K0027.14	M10	14	6,4	22	8,5	30,5	21	1,6	9
K0027.16	M12	16	9,5	22,5	9	30,5	25	2	18
K0027.18	M12	18	9,5	28,5	10	34,5	25	2	18
K0027.20	M16	20	12,7	32	12	39	30	2,5	27
K0027.22	M16	22	12,7	38,2	14	44	30	2,5	27

Cam clamps with riser

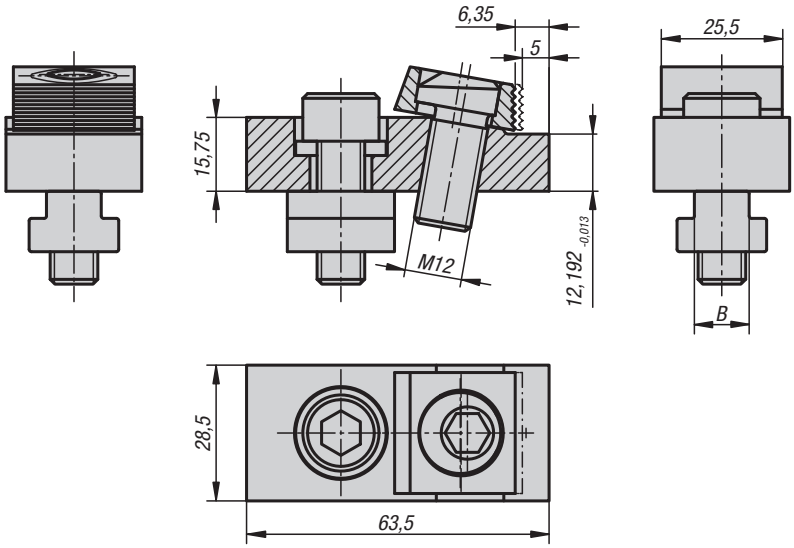

Material:
Steel.

Version:
Body tempered and black oxidised.
Square washer case hardened and brass-plated.

Sample order:
K0028.16

Note:
Also called riser clamps.
These cam clamps with riser can be used directly on machine tables. A positive down force is exerted during clamping.

On request:
Replacement cam screws.

KIPP Cam clamps with riser

Order No.	B Slot width	Clamping force kN
K0028.12	12	12
K0028.14	14	12
K0028.16	16	12
K0028.18	18	12

Toe clamps for T-slots

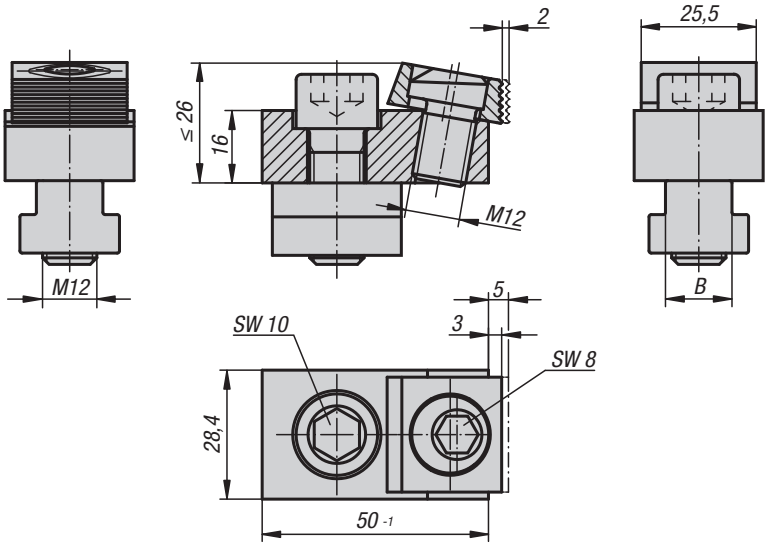

Material:
Steel.

Version:
Body tempered and black oxidised.
Square washer case hardened and brass-plated.

Sample order:
K0029.14

Note:
These toe clamps can be used on machine tables or adapter plates. The positive down force holds the workpiece down on the supporting surface. The square washer can adapt slightly to an angular position i.e. the workpiece does not have to be exactly parallel. The clamping washer has a smooth side for machined surfaces and a serrated side for rough faces.

On request:
Replacement cam screws.

KIPP Toe clamps for T-slots

Order No.	B Slot width	Clamping force kN
K0029.00	without T-nut and screw	18
K0029.14	14	18
K0029.16	16	18
K0029.18	18	18

Chock clamps

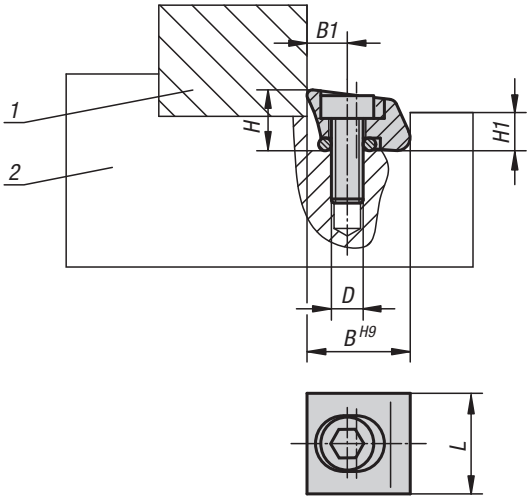

Material:
Clamping element steel or brass.

Version:
Steel hardened.

Sample order:
K0030.113

Note:
Also known as pitbull clamps.
Extremely space-saving design.
No protruding edges due to lateral clamping.
Positive down force.

Drawing reference:
1) workpiece
2) Fixture

KIPP Chock clamps

Order No.	Version	Main material	D	B	B1	H	H1	L	Clamping travel	Clamping force kN	Tightening torque max. Nm
K0030.110	with knife edge	steel	M2,5 x 8	9,5	3,8	6	3,6	9,5	0,15	2,8	1,8
K0030.113	with knife edge	steel	M4 x 12	12,7	5,1	8	4,8	13	0,4	6,6	5,6
K0030.119	with knife edge	steel	M6 x 16	19,05	7,6	11,5	7,2	19	0,6	16	22,5
K0030.210	with blunt edge	steel	M2,5 x 8	9,5	3,8	6	3,6	9,5	0,15	2,8	1,8
K0030.213	with blunt edge	steel	M4 x 12	12,7	5,1	8	4,8	13	0,4	6,6	5,6
K0030.219	with blunt edge	steel	M6 x 16	19,05	7,6	11,5	7,2	19	0,6	16	22,5
K0030.310	with blunt edge	brass	M2,5 x 8	9,5	3,8	6	3,6	9,5	0,15	0,9	0,56
K0030.313	with blunt edge	brass	M4 x 12	12,7	5,1	8	4,8	13	0,4	1,8	2,8
K0030.319	with blunt edge	brass	M6 x 16	19,05	7,6	11,5	7,2	19	0,6	4,2	5,6

Cam clamps

adjustable with riser

K0031.08, K0031.12

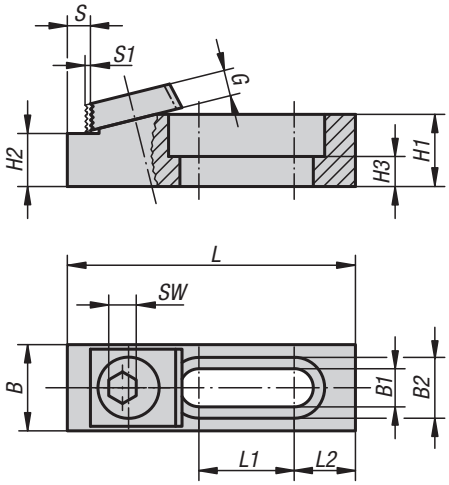

Material:
Steel.

Version:
Body tempered, black oxidised, riser faces ground.
Square washer case hardened and brass-plated.

Sample order:
K0031.12

Note:
Also called multi-fixture clamps and stops.
Cost-effective custom made clamping fixtures can be produced using the adjustable riser cam clamps together with the matching riser stops.

On request:
Replacement cam screws.

K0031.16

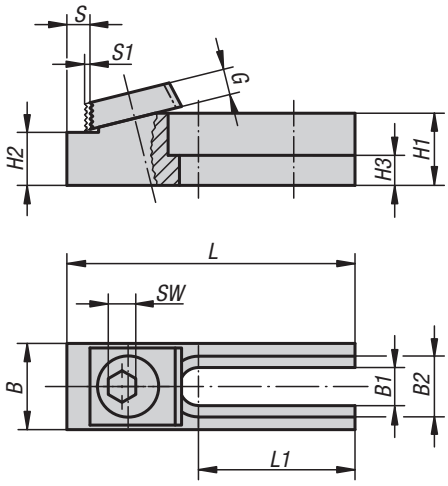

KIPP Cam clamps adjustable with riser

Order No.	suitable fastening screw	L	L1	L2	B	B1	B2	H1	H2	H3	S	S1	G	SW	Long hole	Clamping force kN	Tightening torque max. Nm
K0031.08	M8	63,5	21	13,5	19	8,4	13,4	15,9	11,684 -0,013	6,6	6,3	1,2	5,3	7	closed	8,9	28
K0031.12	M12	95,1	42,7	12,7	28,5	13	19,8	15,9	12,192 -0,013	6,9	7,1	2	9,5	8	closed	17,8	88
K0031.16	M16	107	46,3	-	38	17	24,8	41	35,001 -0,013	21	8,3	2,5	12,7	12	open	26,7	135

Riser stops

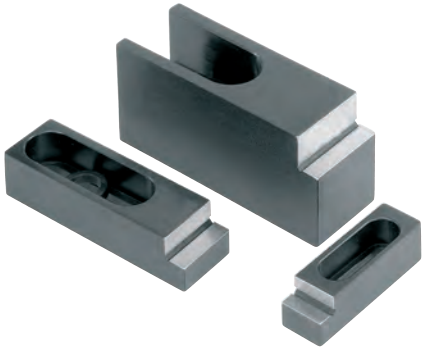

K0032.08, K0032.12

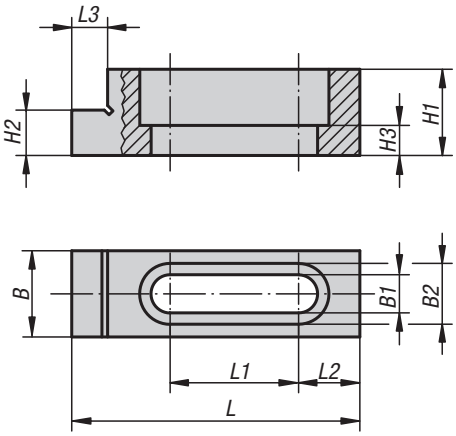

K0032.16

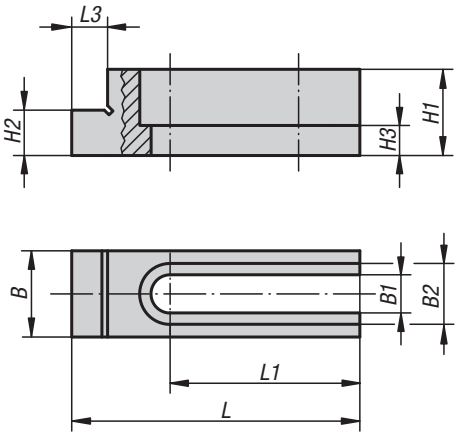

Material:
Steel.

Version:
Tempered, black oxidised.
Riser faces ground.

Sample order:
K0032.12

Note:
Also called multi-fixture clamps and stops.
Cost-effective custom made clamping fixtures can be produced using the adjustable riser cam clamps together with the matching riser stops.

KIPP Riser stops

Order No.	suitable fastening screw	L	L1	L2	L3	B	B1	B2	H1	H2	H3	Long hole
K0032.08	M8	63,5	28,3	13,5	7,9	19	8,4	13,4	19	11,684 -0,013	6,6	closed
K0032.12	M12	95,2	42,7	12,7	7,9	28,5	13,4	19,8	22	12,192 -0,013	6,9	closed
K0032.16	M16	107	46,2	-	9,5	38	17	24,8	50,7	35,001 -0,013	21,3	open

Side clamps

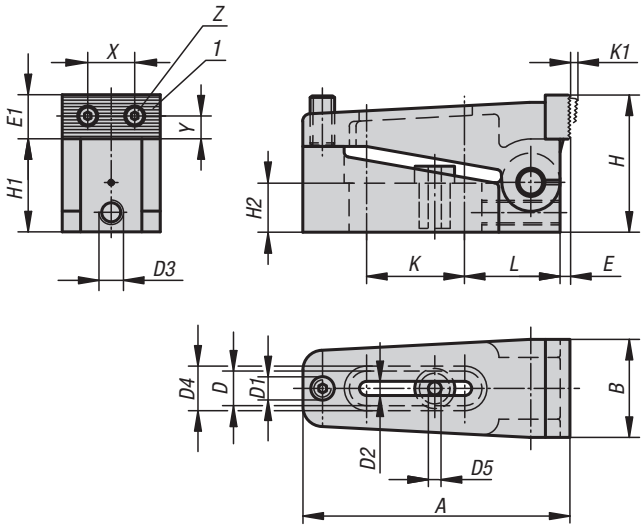

Material:
Body steel.
Jaw mild steel.
Centring bush carbon steel

Version:
Black oxidised.
Jaw plates case-hardened.

Sample order:
K0033.006

Note:
The jaws are reversible - smooth side for machined surfaces, serrated side for rough surfaces. A positive down force is also exerted during clamping.

Drawing reference:
1) reversible jaw

KIPP Side clamps

Order No.	A	B	D	D1	D2	D3	D4	D5	E	E1	H	H1	H2	K	K1	L	X	Y	Z	F=retaining force N
K0033.006	73	25	12,2	M6	7	M6	16	6,5	2,5	11	35	24	12,4	25,5	2,5	27	12	4,5	M3	10000
K0033.010	110	39	18,2	M10	11	M10	24	10,5	4	18	56	38	20	40,5	4	39	20,5	8	M5	40000
K0033.016	170	58	26,2	M16	17	M10	35	17	7	27	85	60	30	60,5	7	61	32	13	M8	100000

Side clamps

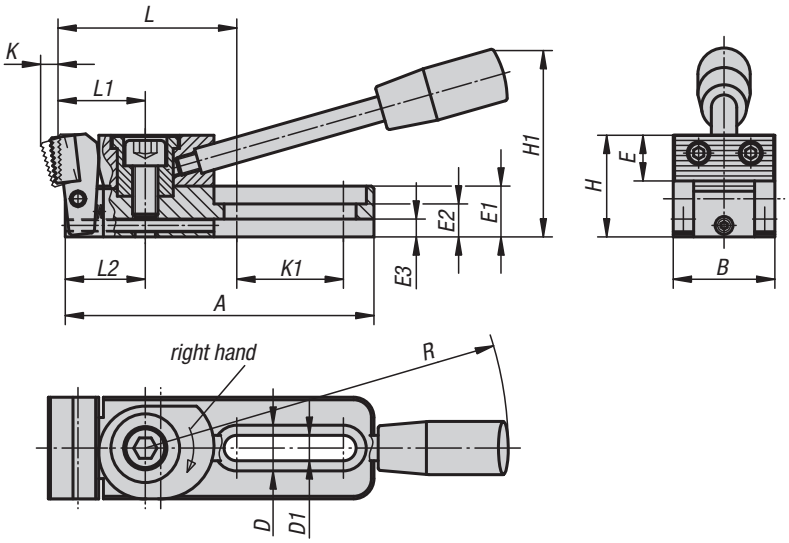

Material:
Steel.

Version:
Case-hardened and black oxidised.

Sample order:
K0034.006010

Note:
This is a quick-action side clamp where workpieces are clamped by rotating a cam wheel which exerts pressure on the swivel jaw, simultaneously producing a positive down force.
Using the stop screw and centring bush (see diagram), the side clamp can be mounted and positioned on a modular grid system.

The versions K0034.006010, K0034.006015, K0034.006030 and K0034.006035 have 2 round carbide inserts.

Clamping force:
K0034.006... = 3800 N
K0034.010... = 7200 N

Form A
steel jaw
serrated

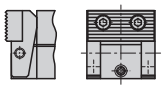

Form B
jaw with 2 round
carbide inserts

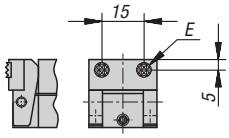

Form C
jaw with 2 round
carbide inserts
and central prism

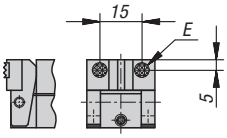

Form D
POM jaw
serrated

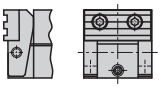

3 rectangular
carbide inserts

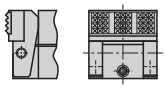

2 rectangular carbide
inserts and central prism

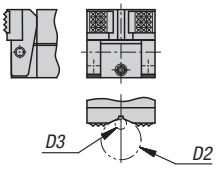

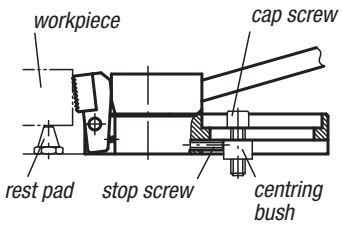

KIPP Side clamps

Order No.	Form	Version 1	A	B	D	D1	D2 max.	D3 min.	E	E1	E2	E3	H	H1	K	K1	L	L1	L2	R	F=retaining force N
K0034.006005	A	right	78	25	12	6,2	-	-	11	12	8	4	25	45	4	26	46,5	22	20	110	3800
K0034.010005	A	right	121,5	40	18	10,2	-	-	18	20	13	7	40	74	6	42	71	35	31,5	143	7200
K0034.006025	A	left	78	25	12	6,2	-	-	11	12	8	4	25	45	4	26	46,5	22	20	110	3800
K0034.010025	A	left	121,5	40	18	10,2	-	-	18	20	13	7	40	74	6	42	71	35	31,5	143	7200
K0034.006010	B	right	78	25	12	6,2	-	-	ø8	12	8	4	24	45	3,5	26	46,5	22	20	110	3800
K0034.010010	B	right	121,5	40	18	10,2	-	-	12,7	20	13	7	39	74	5,5	42	73	35	31,5	143	7200
K0034.006030	B	left	78	25	12	6,2	-	-	ø8	12	8	4	24	45	3,5	26	46,5	22	20	110	3800
K0034.010030	B	left	121,5	40	18	10,2	-	-	12,7	20	13	7	39	74	5,5	42	73	35	31,5	143	7200
K0034.006015	C	right	78	25	12	6,2	9,5	2,5	ø8	12	8	4	24	45	3,5	26	46,5	22	20	110	3800
K0034.010015	C	right	121,5	40	18	10,2	27	4,5	12,7	20	13	7	39	74	5,5	42	73	35	31,5	143	7200
K0034.006035	C	left	78	25	12	6,2	9,5	2,5	ø8	12	8	4	24	45	3,5	26	46,5	22	20	110	3800
K0034.010035	C	left	121,5	40	18	10,2	27	4,5	12,7	20	13	7	39	74	5,5	42	73	35	31,5	143	7200
K0034.006020	D	right	78	25	12	6,2	-	-	11	12	8	4	25	45	4	26	46,5	22	20	110	3800
K0034.010020	D	right	121,5	40	18	10,2	-	-	18	20	13	7	40	74	6	42	70,5	35	31,5	143	7200
K0034.006040	D	left	78	25	12	6,2	-	-	11	12	8	4	25	45	4	26	46,5	22	20	110	3800
K0034.010040	D	left	121,5	40	18	10,2	-	-	18	20	13	7	40	74	6	42	70,5	35	31,5	143	7200

Side clamps

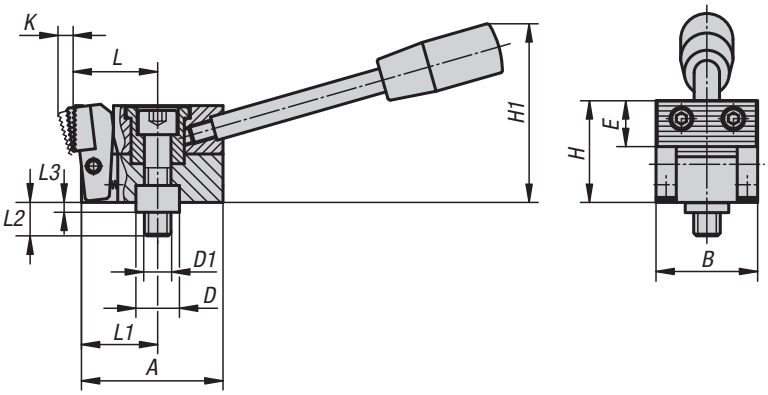

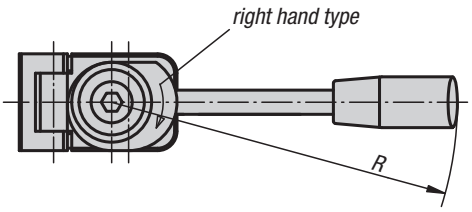

Material:
Steel.

Version:
Case-hardened and black oxidised.

Sample order:
K0035.006005

Note:
This is a quick-action side clamp where workpieces are clamped by rotating a cam wheel which exerts pressure on the swivel jaw, simultaneously producing a positive down force.
Using the centring bush (see diagram), the side clamp can be mounted and positioned on a modular grid system.

The versions K0035.006010, K0035.006015, K0035.006030 and K0035.006035 have 2 round carbide inserts.

Clamping force:
K0035.006... = 3800 N
K0035.010... = 7200 N

Form A
steel jaw
serrated

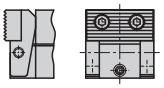

Form B
jaw with 2 round
carbide inserts

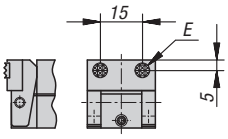

Form C
jaw with 2 round
carbide inserts
and central prism

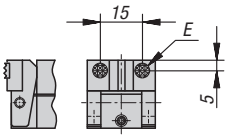

Form D
POM jaw
serrated

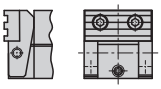

3 rectangular
carbide inserts

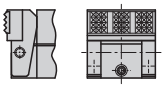

2 rectangular carbide
inserts and central prism

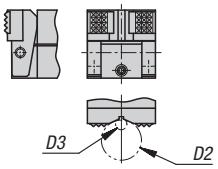

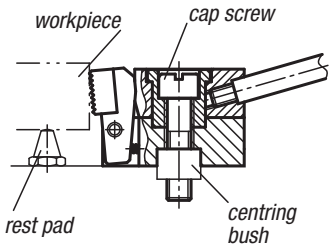

KIPP Side clamps

Order No.	Form	Version 1	A	B	D	D1	D2 max.	D3 min.	E	H	H1	K	L	L1	L2	L3	R	F=retaining force N
K0035.006005	A	right	38,5	25	12	M6	-	-	11	25	45	4	22	20	17	4	110	3800
K0035.010005	A	right	58,5	40	18	M10	-	-	18	40	74	6	35	31,5	27	6	143	7200
K0035.006025	A	left	38,5	25	12	M6	-	-	11	25	45	4	22	20	17	4	110	3800
K0035.010025	A	left	58,5	40	18	M10	-	-	18	40	74	6	35	31,5	27	6	143	7200
K0035.006010	B	right	38,5	25	12	M6	-	-	ø8	24	45	3,5	22	20	17	4	110	3800
K0035.010010	B	right	58,5	40	18	M10	-	-	12,7	39	74	5,5	37	31,5	27	6	143	7200
K0035.006030	B	left	38,5	25	12	M6	-	-	ø8	24	45	3,5	22	20	17	4	110	3800
K0035.010030	B	left	58,5	40	18	M10	-	-	12,7	39	74	5,5	37	31,5	27	6	143	7200
K0035.006015	C	right	38,5	25	12	M6	9,5	2,5	ø8	24	45	3,5	22	20	17	4	110	3800
K0035.010015	C	right	58,5	40	18	M10	27	4,5	12,7	39	74	5,5	37	31,5	27	6	143	7200
K0035.006035	C	left	38,5	25	12	M6	9,5	2,5	ø8	24	45	3,5	22	20	17	4	110	3800
K0035.010035	C	left	58,5	40	18	M10	27	4,5	12,7	39	74	5,5	37	31,5	27	6	143	7200
K0035.006020	D	right	38,5	25	12	M6	-	-	11	25	45	4,5	22	20	17	4	110	3800
K0035.010020	D	right	58,5	40	18	M10	-	-	18	40	74	7	34,5	31,5	27	6	143	7200
K0035.006040	D	left	38,5	25	12	M6	-	-	11	25	45	4,5	22	20	17	4	110	3800
K0035.010040	D	left	58,5	40	18	M10	-	-	18	40	74	7	34,5	31,5	27	6	143	7200

Toe clamps compact

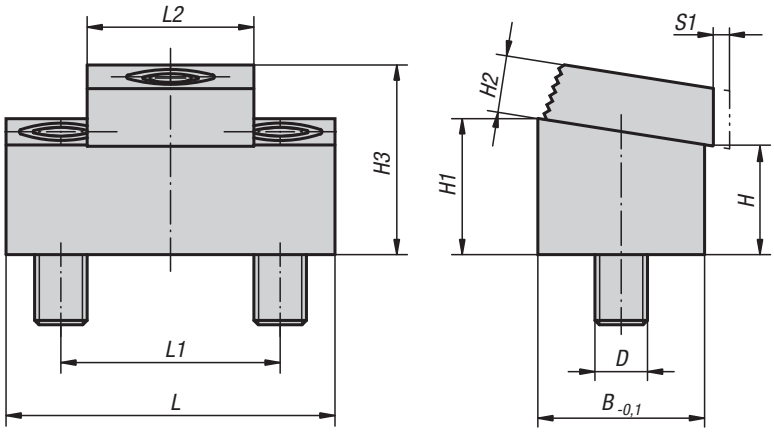

Material:
Steel.

Version:
Body tempered and black oxidised.
Square washer case-hardened and brass-plated.

Sample order:
K0036.10

Note:
This cam action compact toe clamp requires very little space to produce multi-fixture clamping.
Workpieces can be clamped in series by using the back side of a clamp as a stop for the next row.
Mount preferably in slots with B +0.05 mm. The height of the clamp can be adjusted by altering the slot depth.

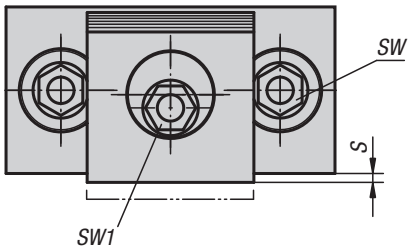

Example of series clamping using compact toe clamps

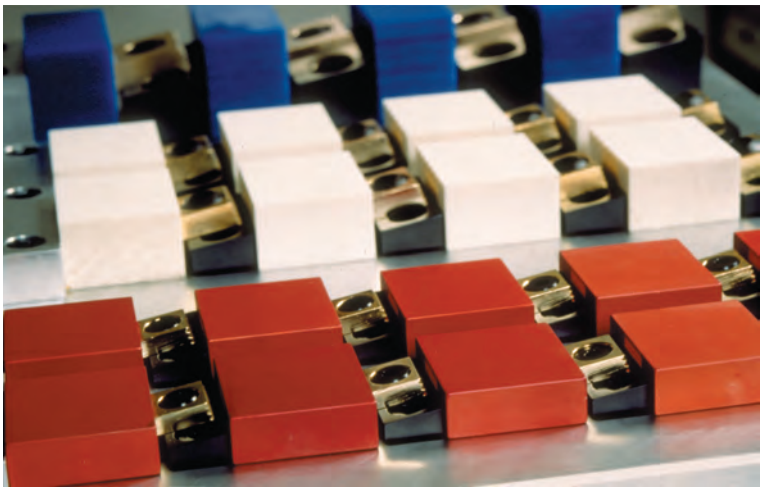

KIPP Toe clamps compact

Order No.	L	L1	L2	B	H	H1	H2	H3 max.	S	D	S1 (travel)	SW	SW1	Clamping force kN	Tightening torque max. Nm
K0036.08	43,2	25,4	19	19	12,7	15,7	6,4	21,4	1,5	M8	1,6	5	7	8,9	28
K0036.10	54	33,5	25,4	25,4	11,4	15,4	9,7	24,5	1,8	M10	2	7	8	17,8	88
K0036.12	75	50,8	38	38,1	25,5	31,5	13	43	2,05	M12	2,5	10	12	26,7	135

Wedge clamps

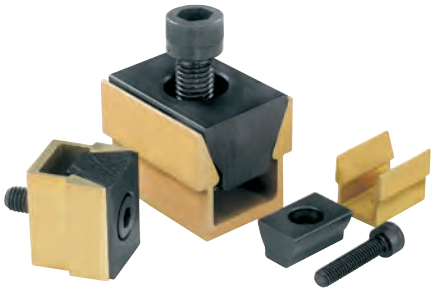

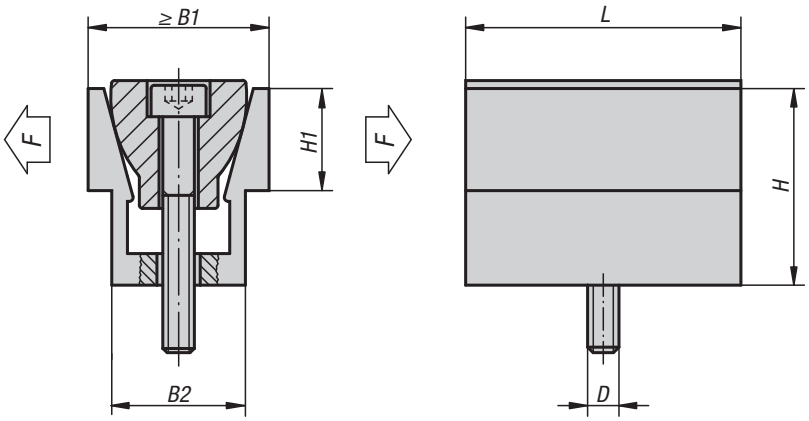

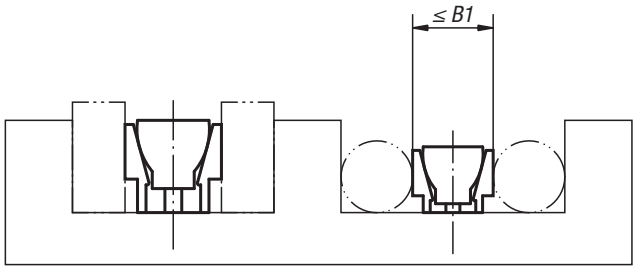

Material:
Channel aluminium profile.
Wedge hardened steel.

Version:
Channel anodised.
Wedge black oxidised.

Sample order:
K0037.08

Note:
Two workpieces can be held simultaneously with the wedge clamp. They are ideal for clamping round or rectangular pieces. The compact design allows space-saving series clamping.

Drawing reference:
In clamped position dimension B1 max. given in the table should be achieved.

KIPP Wedge clamps

Order No.	D	L	B1 min. - max.	B2	H	H1	Clamping force max. kN	Tightening torque max. Nm
K0037.04	M4	15,9	12,3 - 13,1	10,4	12,7	5,6	2,2	3,4
K0037.06	M6	23,8	18,6 - 19,9	16,1	19	9,5	6,7	14,3
K0037.08	M8	31,7	24,8 - 26,6	20,8	25,4	12,7	8,9	14,5
K0037.12	M12	47,6	37,3 - 39,7	30,8	38,1	19	15,6	38,4
K0037.16	M16	63,5	49,7 - 52,8	41,2	50,8	25,4	26,7	74,6

Wedge clamps

machinable

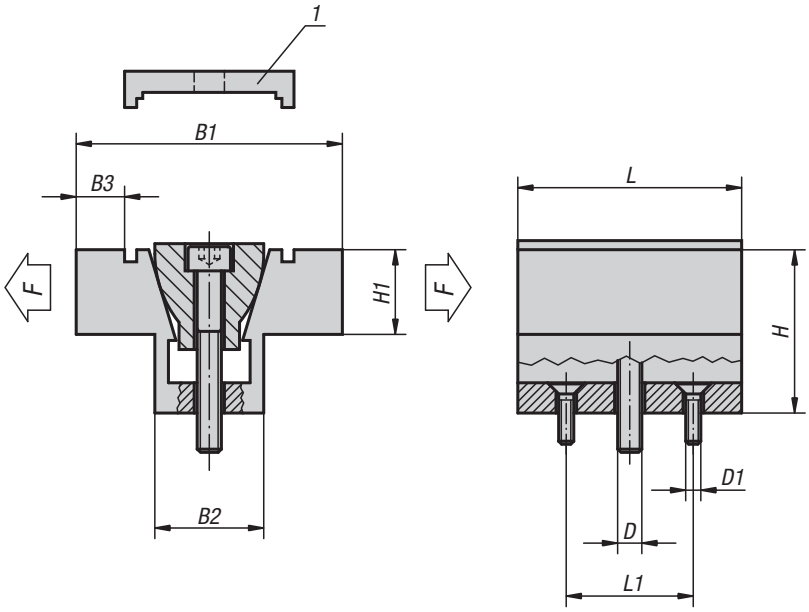

Material:
Channel aluminium profile.
Wedge hardened steel.

Version:
Channel anodised.
Wedge black oxidised.

Sample order:
K0038.08

Note:
Two workpieces can be held simultaneously with the wedge clamp. The jaws have extra material allowing them to be machined to conform to the shape of the workpiece. The compact design allows space-saving series clamping.

Drawing reference:
1) The locking plate is only used for machining the form, not for clamping the workpiece.

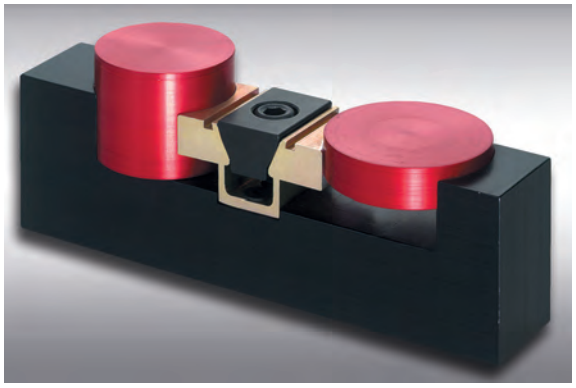

KIPP Wedge clamps machinable

Order No.	D	D1	L	L1	B1 min. - max.	B2	B3	H	H1	Clamping force max. kN	Tightening torque max. Nm
K0038.04	M4	M2	15,7	10,16	28,6 - 29,1	10,6	4,6	12,7	6,3	2,2	3,4
K0038.06	M6	M4	23,9	15,9	38,1 - 39	16,1	6,6	19,1	9,4	6,7	14,3
K0038.08	M8	M4	31,8	20,6	50,8 - 52	20,8	9,9	25,4	12,7	8,9	14,5
K0038.12	M12	M5	47,5	30,5	76,2 - 78	30,9	15,7	38,1	19	15,6	38,4
K0038.16	M16	M6	63,5	41,28	101,6 - 103,9	41,3	20,3	50,8	25,4	26,7	74,6

Wedge clamps

jaw face smooth or serrated

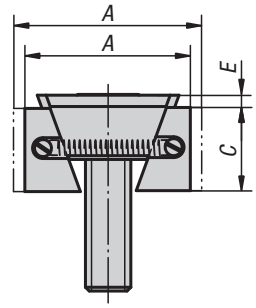

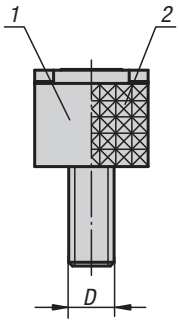

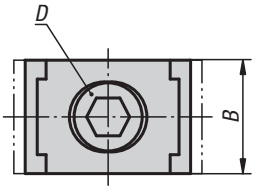

Material:
Wedge and jaw segments carbon steel.

Version:
Wedge and jaw segments hardened, black.

Sample order:
K0039.2208

Note:
The functioning principle make the wedge clamps ideal for series clamping. The wedge form can exert high clamping forces.
These wedge clamps can be mounted in grid holes or T-slots. Tightening the socket screw moves the wedge down and the jaws out pressing the workpieces against the fixtures fixed stops.
The wedge has a slightly elongated hole allowing for movement to compensate for tolerances.

Spread width:
M8 = ±0.5 mm
M10 = ±1.0 mm
M12 = ±1.0 mm
M16 = ±1.5 mm

Drawing reference:
D) DIN 6912 cap screw

1) Jaw face smooth
2) Jaw face serrated
3) Wedge clamps
4) Workpiece
5) Fixed stop

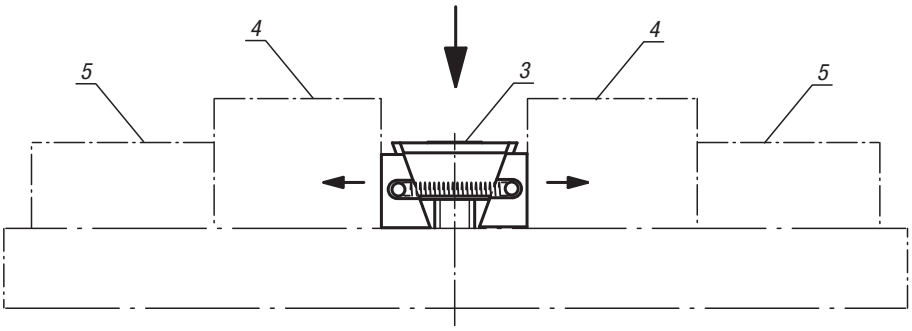

KIPP Wedge clamps, narrow version

Order No. smooth	Order No. serrated	A min.	A max.	B	C	D	E	Clamping force max. kN	Tightening torque max. Nm
K0039.1108	K0039.2108	30,5	33,5	24	15	M8X25	2	15	25
K0039.1110	K0039.2110	32	37	28	19	M10X25	3,5	20	49
K0039.1112	K0039.2112	44	49,5	30	22	M12X40	3,5	30	85
K0039.1116	K0039.2116	55	62	40	29	M16X60	4	50	210

KIPP Wedge clamps, wide version

Order No. smooth	Order No. serrated	A min.	A max.	B	C	D	E	Clamping force max. kN	Tightening torque max. Nm
K0039.1208	K0039.2208	30,5	33,5	30	15	M8X25	2	15	25
K0039.1210	K0039.2210	32	37	38	19	M10X25	3,5	20	49
K0039.1212	K0039.2212	44	49,5	48	22	M12X40	3,5	30	85
K0039.1216	K0039.2216	55	62	48	29	M16X60	4	50	210

Wedge clamps

machinable

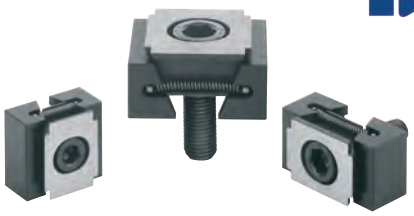

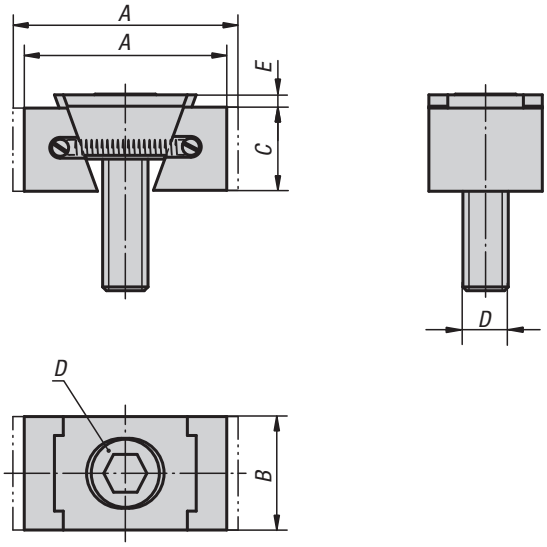

Material:
Wedge and jaw segments carbon steel.

Version:
Wedge and jaw segments tempered, black.

Sample order:
K0649.3110

Note:
These wedge clamps have extra long jaws. This extra material allows the jaws to machined to suit the form of the workpiece.
The functioning principle make the wedge clamps ideal for series clamping. The wedge form can exert high clamping forces.
These wedge clamps can be mounted in grid holes or T-slots. Tightening the socket screw moves the wedge down and the jaws out pressing the workpieces against the fixtures fixed stops.
The wedge has a slightly elongated hole allowing for movement to compensate for tolerances.

Spread width:
M8 = ±0.5 mm
M10 = ±1.0 mm
M12 = ±1.0 mm
M16 = ±1.5 mm

Attention:
These wedge clamps have a machining allowance per jaw of 3 mm for version M8 and 5 mm for versions M10, M12 and M16.

Drawing reference:
D) DIN 6912 cap screw

1) wedge clamps
2) workpiece
3) fixed stop
4) base plate
5) hydraulic/pneumatic cylinder

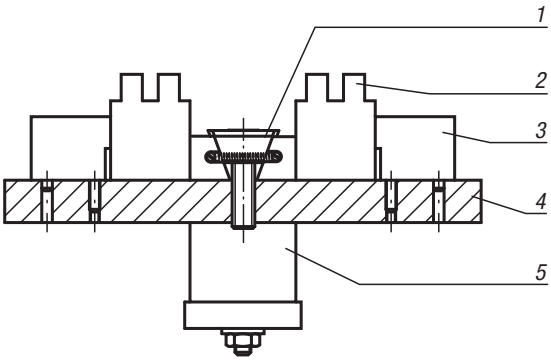

KIPP Wedge clamps, machinable

Order No.	Version	A min.	A max.	B	C	D	E	Clamping force max. kN	Tightening torque max. Nm
K0649.3108	narrow	36,5	39,5	24	15	M8X25	2	11	19
K0649.3110	narrow	42	47	28	19	M10X25	3,5	15	37
K0649.3112	narrow	54	59,5	30	22	M12X40	3,5	23	65
K0649.3116	narrow	65	72	40	29	M16X60	4	38	160
K0649.3208	wide	36,5	39,5	30	15	M8X25	2	11	19
K0649.3210	wide	42	47	38	19	M10X25	3,5	15	37
K0649.3212	wide	54	59,5	48	22	M12X40	3,5	23	65
K0649.3216	wide	65	72	48	29	M16X60	4	38	160

Wedge clamps

jaw faces serrated

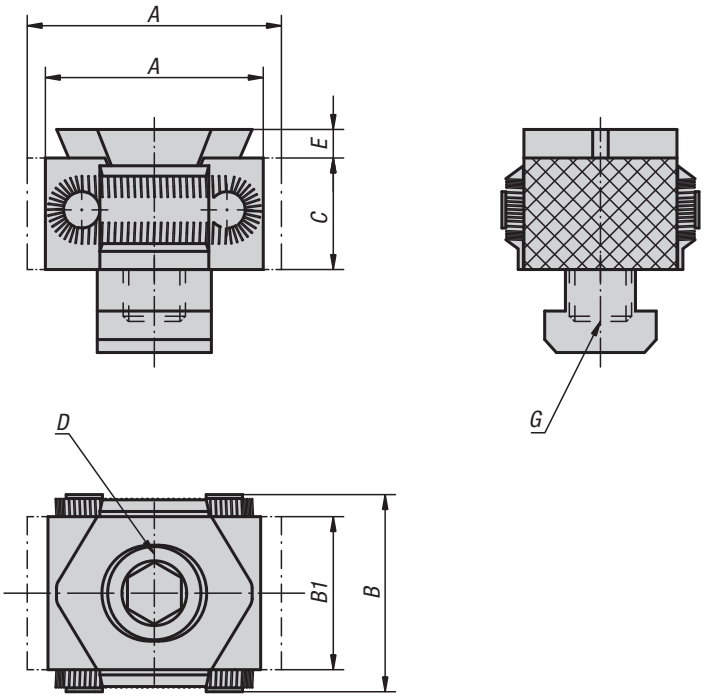

Material:
Body and clamping segments tool steel.

Version:
Body hardened.
Jaw segments hardened (49-51 HRC) black oxidised.
Wedge faces ground.

Sample order:
K0040.1618

Note:
The compact design makes these wedge clamps ideal for horizontal and vertical series clamping. The hardened and ground wedge faces can exert high clamping forces.
These wedge clamps can be mounted in grid holes or T-slots. Tightening the DIN 912 socket screw moves the wedge down and the jaws out pressing the workpieces against the fixtures fixed stops.

The jaws of version K0040.08 and K0040.0810 are not serrated.

The wedge has a slightly elongated hole allowing for movement.

Spread width:
K0040.08 = ±0.5 mm
K0040.12 = ±1.0 mm
K0040.16 = ±1.5 mm.

Drawing reference:
D) DIN 912 cap screw

1) Wedge clamps
2) Workpiece
3) Fixed stop

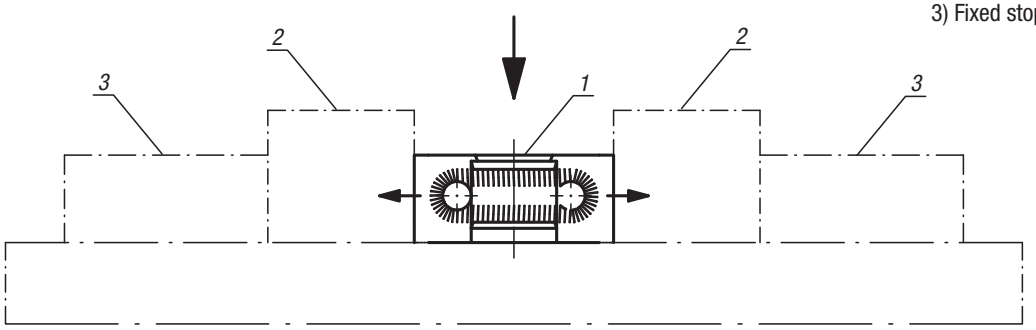

KIPP Wedge clamps, jaw faces serrated

Order No.	Version 1	A min.	A max.	B	B1	C	D	E	Version 2	G	Clamping force max. kN	Tightening torque max. Nm
K0040.08	smooth	27	31	29	21	15	M8X25	2,5	for tapped hole	M8	15	25
K0040.0810	smooth	27	31	29	21	15	M8X25	2,5	for t-slot	10	15	25
K0040.12	serrated	42	49	41	30	22	M12X40	4	for tapped hole	M12	30	85
K0040.1214	serrated	42	49	41	30	22	M12X30	4	for t-slot	14	30	85
K0040.16	serrated	57	66	56	42	29	M16X60	5	for tapped hole	M16	50	210
K0040.1618	serrated	57	66	56	42	29	M16X50	5	for t-slot	18	50	210

Wedge clamps

machinable

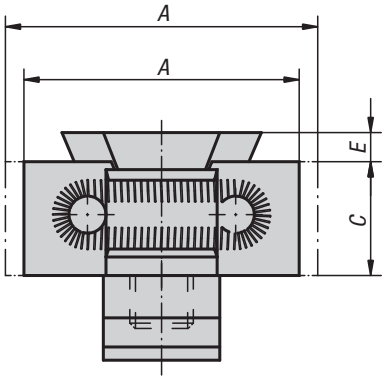

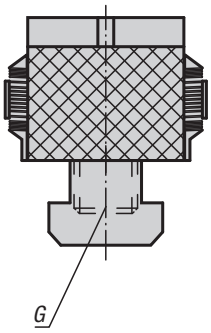

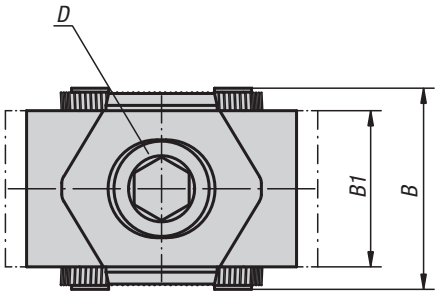

Material:
Body tool steel.
Jaw segments tool steel (30 HRC).

Version:
Body hardened.
Jaw segments black oxidised.
Wedge faces ground.

Sample order:
K0041.12

Note:
These wedge clamps have a machining allowance per jaw of 3 mm for version K0041.08 and 5 mm for versions K0041.12 and K0041.16.
This extra material allows the jaws to machined to suit the form of the workpiece.

The jaws version K0041.08 and K0041.0810 are not serrated.

Spread width:
K0041.08 = ±0.5 mm
K0041.12 = ±1.0 mm
K0041.16 = ±1.5 mm

On request:
Pre-formed jaw segments or other hardness grades.

Drawing reference:
D) DIN 912 cap screw

1) wedge clamps
2) workpiece
3) fixed stop
4) base plate
5) hydraulic/pneumatic cylinder

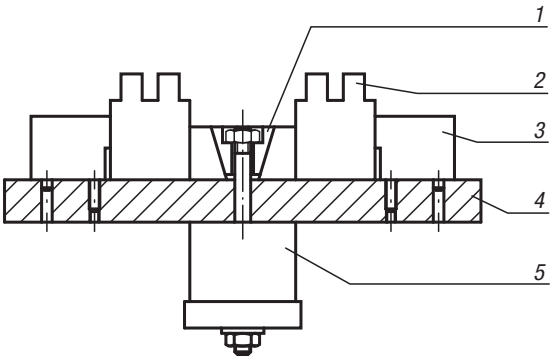

KIPP Wedge clamps machinable

Order No.	A min.	A max.	B	B1	C	D	E	Version 2	G	Clamping force max. kN	Tightening torque max. Nm
K0041.08	33	37	29	21	15	M8X25	2,5	for tapped hole	M8	15	25
K0041.0810	33	37	29	21	15	M8X25	2,5	for t-slot	10	15	25
K0041.12	52	59	41	30	22	M12X40	4	for tapped hole	M12	30	85
K0041.1214	52	59	41	30	22	M12X30	4	for t-slot	14	30	85
K0041.16	67	76	56	42	29	M16X60	5	for tapped hole	M16	50	210
K0041.1618	67	76	56	42	29	M16X50	5	for t-slot	18	50	210

Wedge clamps double wedge

jaw faces serrated

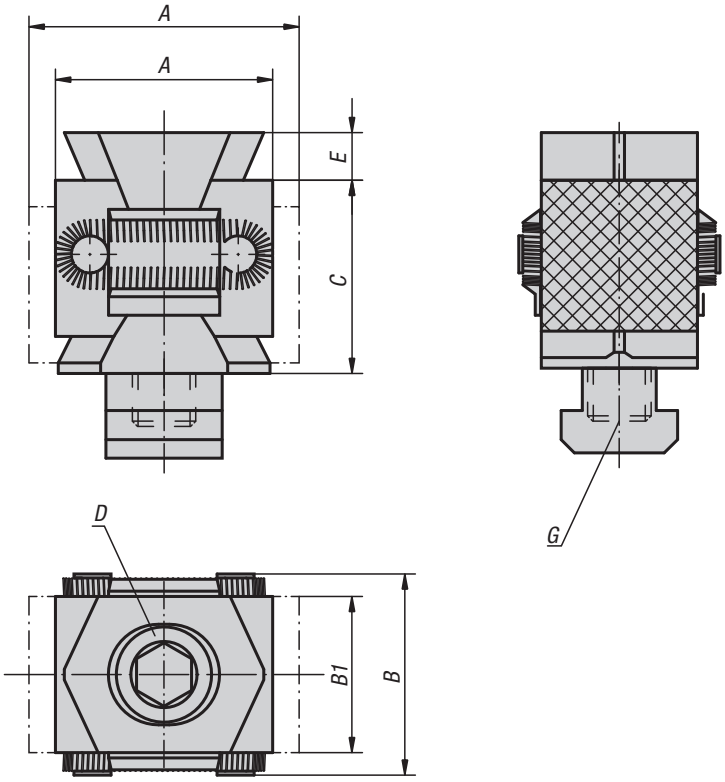

Material:
Body and jaw segments tool steel.

Version:
Body hardened.
Jaw segments hardened (49-51 HRC) and black oxidised.
Wedge faces ground.

Sample order:
K0042.1214

Note:
The compact design makes these double wedge clamps ideal for horizontal and vertical series clamping. The hardened and ground wedge faces can exert high clamping forces.
These wedge clamps can be mounted in grid holes or T-slots. Tightening the DIN 912 socket screw pulls the wedges together and the jaws out pressing the workpieces against the fixtures fixed stops.
The double wedges create a positive down force.

Spread width:
K0042.12 = ±1.0 mm
K0042.16 = ±1.5 mm

Drawing reference:
D) DIN 912 cap screw

1) Wedge clamps
2) Workpiece
3) Fixed stop

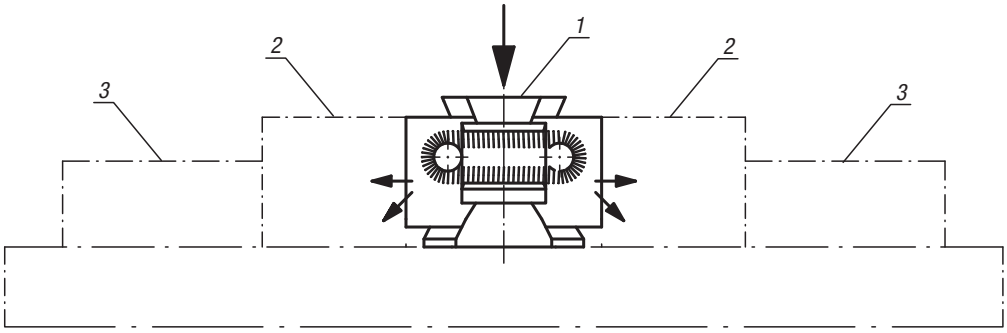

KIPP Wedge clamps double wedge, jaw faces serrated

Order No.	A min.	A max.	B	B1	C	D	E	Version 2	G	Clamping force max. kN	Tightening torque max. Nm
K0042.12	42	49	41	30	36	M12X60	5	for tapped hole	M12	40	85
K0042.1214	42	49	41	30	36	M12X50	5	for t-slot	14	40	85
K0042.16	57	67	56	42	50	M16X80	5	for tapped hole	M16	60	210
K0042.1618	57	67	56	42	50	M16X70	5	for t-slot	18	60	210

Wedge clamps

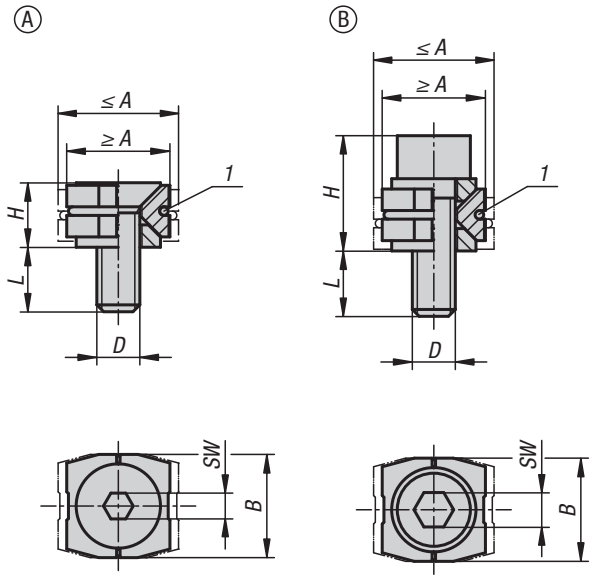

Material:
Carbon steel.

Version:
Jaw plate hardened (33–39 HRC) and black oxidised.

Sample order:
K1167.11205

Note:
Due to the functioning principle, wedge clamps are suitable for clamping in series.
The wedges generate higher clamping forces.
The wedge clamps are available with cap screws or countersunk screws.
Wedge clamps with pull-down effect.

Drawing reference:
Dimension L refers to ≤ A.
Dimension H refers to ≥ A.

1) O-ring

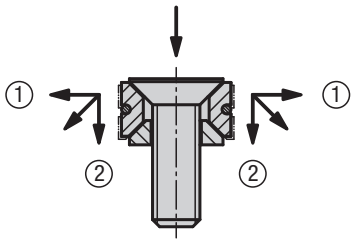

(Jaws exert positive down force)
1 Horizontal thrust against workpiece
2 Vertical thrust prevents the workpiece lifting

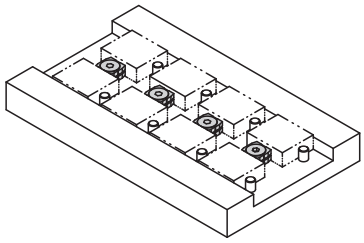

KIPP Wedge clamps

Order No.	Form	Version 2	A min.	A max.	B	D	H	L	SW	Clamping force max. kN	Tightening torque max. Nm
K1167.11205	A	with csk. screw	12	14	12	M5X15	7,5	9,5	3	2	4,3
K1167.11506	A	with csk. screw	15	17	14,8	M6X16	8,7	9,3	4	3,5	7,3
K1167.11808	A	with csk. screw	18,5	21,5	18,4	M8X20	11,8	11,3	5	5	18
K1167.21205	B	with socket head screw	12	14	12	M5X16	13,4	9,6	4	3	5,4
K1167.21506	B	with socket head screw	15	17	14,8	M6X18	15,8	10,2	5	4,5	9,1
K1167.21808	B	with socket head screw	18,5	21,5	18,4	M8X25	21,2	14,9	6	9	22

Flat clamp, steel

for T-slot

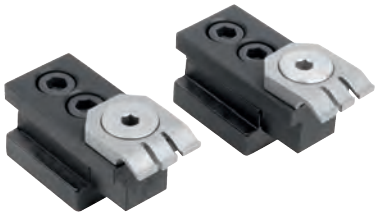

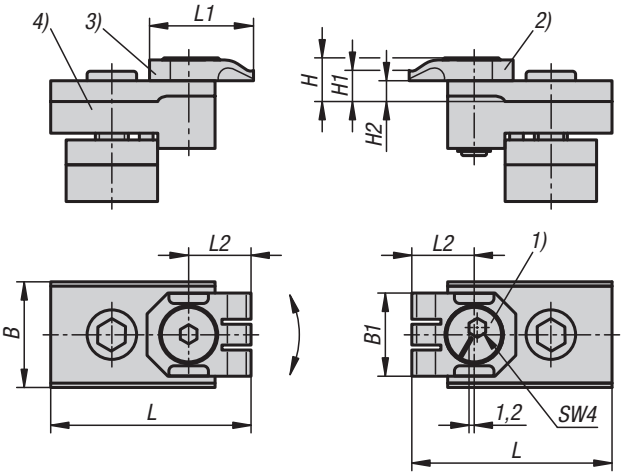

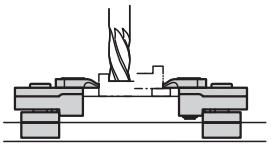

Workpiece clamped directly on the table top or supported on rests from below (e.g for drilling though).

Material:
Steel body.
Clamping element and stop made from spring steel.

Version:
Base element tempered.

Sample order:
K1540.10

Note for ordering:
The order number includes one pair, made up of a clamping element and a stop.

Note:
By turning the cam screw on the clamping element the workpiece is forced downwards (positive down force). The clamping element also forces the workpiece against the stop, thereby providing a flat parallel seating.
The stop side provides a reference that makes precise replications possible.
Cam hub: 1.2 mm.

Application:
Suitable for clamping multiple and individual parts on fixtures and T-slot tables.

Drawing reference:
1) Cam screw
2) Clamping element
3) Stop
4) Body

Using the cam

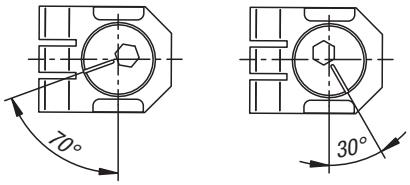

Quick clamp 1/4 rotation

KIPP Flat clamp, steel, for T-slot

Order No.	B	B1	H	H1	H2	L	L1	L2	SW	Slot width	F kN	Tightening torque Nm
K1540.10	18	20	10,5	7,5	5	46	25	15	4	10	4	9
K1540.12	18	20	10,5	7,5	5	48	25	15	4	12	4	9
K1540.14	22	20	10,5	7,5	5	52	25	15	4	14	4	9
K1540.16	25	20	10,5	7,5	5	48	25	15	4	16	4	9
K1540.18	25	20	10,5	7,5	5	48	25	15	4	18	4	9

Flat clamps

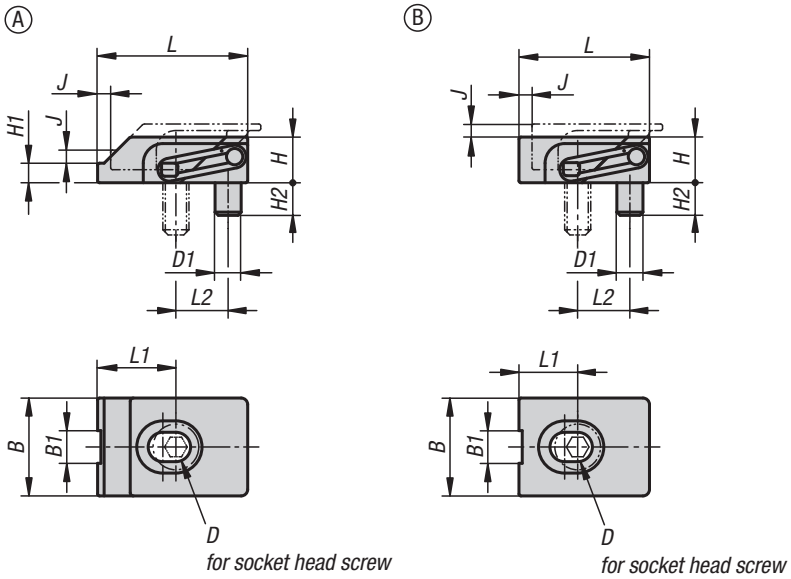

Material:
Carbon steel.

Version:
Hardened (33–39 HRC) and black oxidised.

Sample order:
K1168.204

Note:
Particularly low workpieces can be clamped using these flat clamps.
Clamping element with pull-down effect.
Clamping element and fixed block in one compact unit.

Drawing reference:
Dimension L1 refers to clamped state.

installation instructions

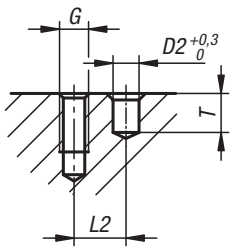

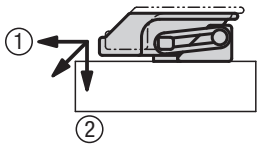

(Jaws exert positive down force)
1 Horizontal thrust against workpiece
2 Vertical thrust prevents the workpiece lifting

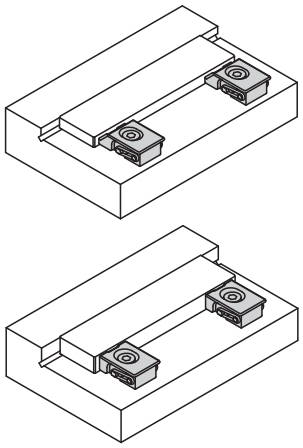

KIPP Flat clamps

Order No.	Form	B	B1	D1	D2	G	H	H1	H2	J	L	L1	L2	T	Clamping force max. kN	Tightening torque max. Nm
K1168.104	A	15	5	4	4	M4	7	3	5	2	23	12	8	6	2	2,7
K1168.105	A	19	7	5	5	M5	9	4	6	2,5	28	14	10	7	3	5,4
K1168.204	B	15	5	4	4	M4	7	-	5	2	20	9	8	6	2,5	2,7
K1168.205	B	19	7	5	5	M5	9	-	6	2,5	25	11	10	7	3,5	5,4

Mandrel collets

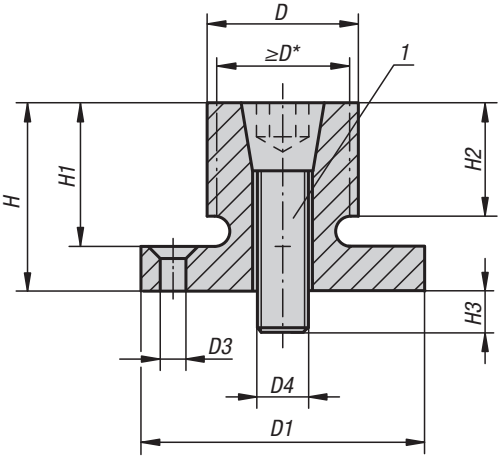

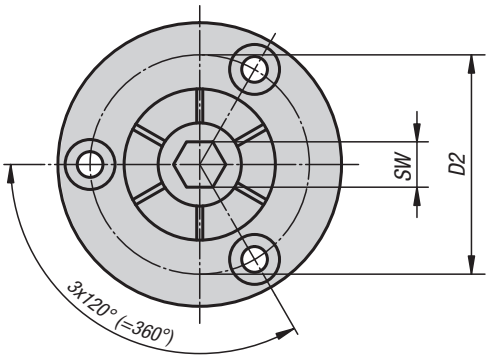

K0357.1630175

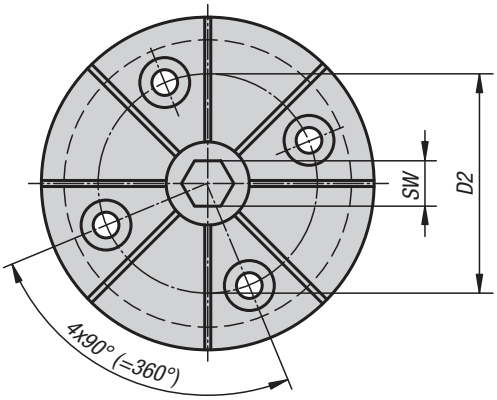

Material:
Mandrel mild steel.
Taper-head screw low-carbon steel

Version:
Mandrel black oxidised.
Taper-head screw case-hardened.

Sample order:
K0357.081420

Note:
The mandrel collet is ideal for finish machining turned parts. The diameter “D” can be turned or milled to suit the workpiece ID.
Low design - no interfering clamp straps.
Tightened using a hex socket wrench or hydraulics.

* D min. = smallest diameter to which “D” may be turned or milled.

Assembly:
Expand the mandrel approx. 0.1 mm over the relaxed diameter. Turn or mill the mandrel to suit the internal diameter of the workpiece. The base flange can be centred in a pocket or using dowel pins.

Drawing reference:
1) taper-head screw

KIPP Mandrel collets

Order No.	D	D min.	D1	D2	D3 for screw ISO 10642	D4 Tapered-head bolt	H	H1	H2	H3	SW Tapered-head bolt	Tightening torque max. Nm	Clamping force max. kN
K0357.020407	7,4	4,1	20 h9	13,7	M2	M2	10,7	7,6	6,1	4,1	1,5	0,7	1,1
K0357.040812	12,4	8	29,72 h9	21	M3	M4	21,8	16	15	8	3	5	4,2
K0357.061214	14,2	12,2	31,5 h9	23,1	M3	M6	24,9	19	15	12	5	17	8,5
K0357.081420	20	13,5	37,5 h9	29	M3	M8	24,9	19	15	14	6	34	11,1
K0357.062027	27	18	50 h9	39,4	M4	M10	28,6	22,2	17,5	17	8	60	20
K0357.102535	35,3	23	56 h9	45,5	M4	M12	31,8	25,4	20,6	21	10	150	26,3
K0357.123442	42	29,3	69,5 h8	55,9	M5	M16	39,6	31,8	27	22	14	280	44,5
K0357.123452	51,5	29,3	75,5 h9	63,9	M5	M16	39,6	31,8	27	22	14	280	44,5
K0357.163077	77,7	29,3	107,5 h9	92,5	M6	M16	45,5	37,6	32,3	20	14	280	44,5
K0357.1630103	103	29,3	132,9 h9	118	M6	M16	45,5	37,6	32,3	20	14	280	44,5
K0357.1630175	175	29,3	132,9 h9	118	M6	M16	45,5	37,6	32,3	20	14	280	44,5

Mandrel collets

with side lock

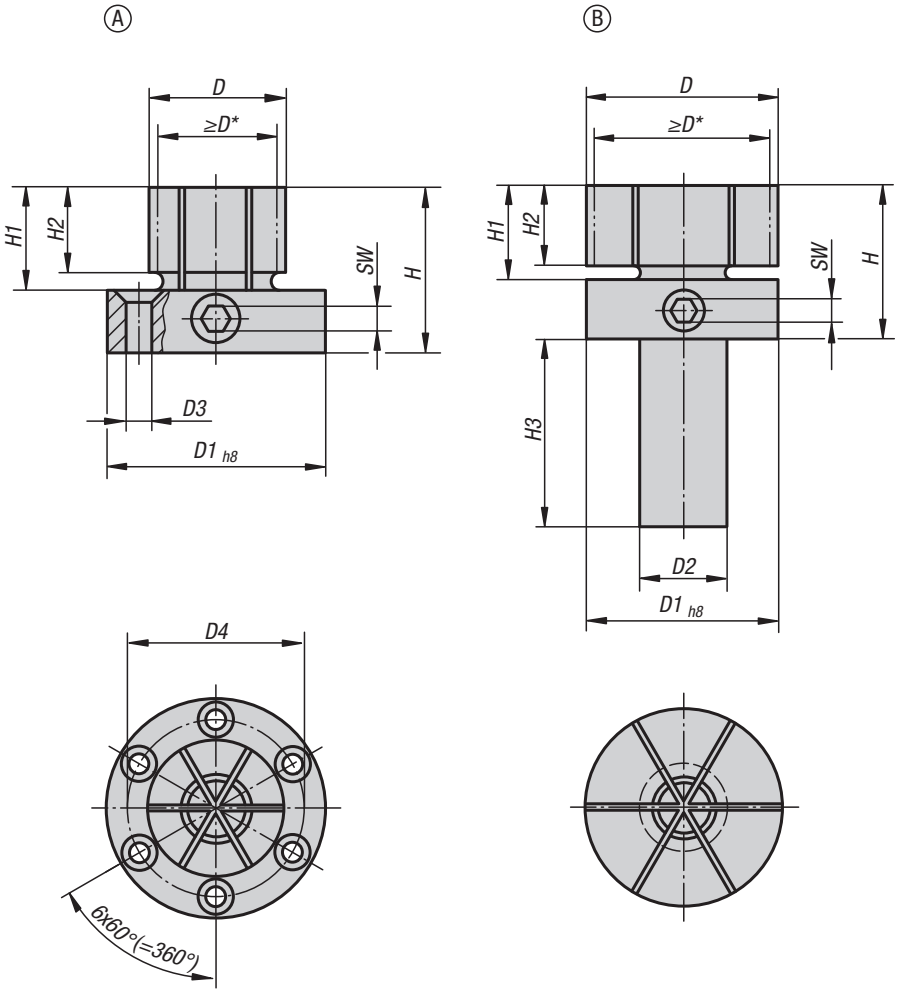

Material:
Mandrel mild steel.
Clamping screw carbon steel.

Version:
Mandrel black oxidised.
Clamping screw tempered to 10.9, hardened and PTFE coated.

Sample order:
K0643.118029

Note:
The side lock make these mandrel collets ideal for finish machining parts with blind internal diameters. The diameter “D” can be turned or milled to suit the workpiece ID.

Manual tightening with hexagon socket wrench.

* D min. = smallest diameter to which “D” may be turned or milled.

Assembly:
Expand the mandrel approx. 0.1 mm over the relaxed diameter. Turn or mill the mandrel to suit the internal diameter of the workpiece. A locking ring is included for machining.
The shank or flange is centred in a reamed hole or pocket.
Form A is supplied with 6 fastening screws.

Drawing reference:
Form A:
for machining centres, drilling and milling machines
Form B:
with shaft for holding in lathe chucks

KIPP Mandrel collets with side lock

Order No.	Form	D	D min.	D1	D2	D3 for screw ISO 10642	D4	H	H1	H2	H3	SW	Tightening torque max. Nm	Clamping force max. kN
K0643.118029	A	28,7	17,8	50	-	M4	39,4	41,3	22,4	17,5	-	6	66	20
K0643.218053	B	53,3	18	53,3	25	-	-	44,4	25,4	21	45	6	66	20

Shaft clamping units

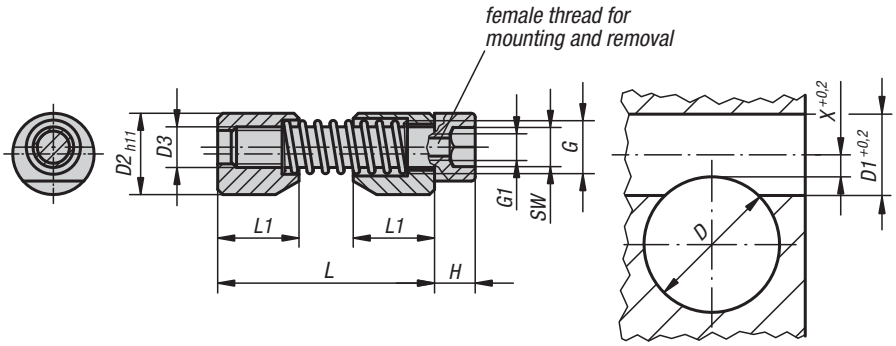

Material:
Jaws steel.
Spring 1.4310.
Screw grade 8.8.

Version:
Jaws black oxidised.
Screw blue electro zinc-plated.

Sample order:
K0375.04

Note:
These shaft clamping units are the simple alternative to conventional shaft clamping (slot and grub screw). The units are suitable for various materials (metal, plastic, wood etc).
To loosen a jammed clamp simply hit it axially or extract it using a screw in the jaw end or screw head.

axial and radial clamping

clamping torque Mx

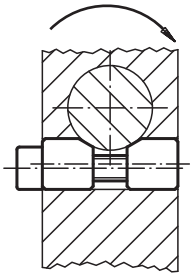

adjusting and clamping

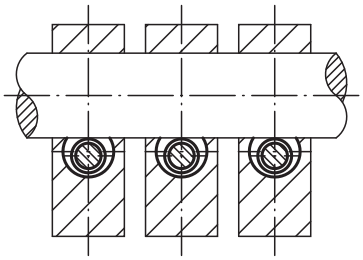

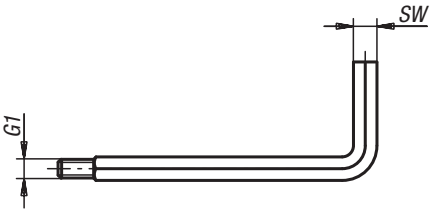

Special hex key with a threaded pin.
The pin is screwed into the hole G1 in the head of the cap screw to aid in positioning or removing the clamping unit.

Insert clamping unit

Insert shaft or tube

Clamp

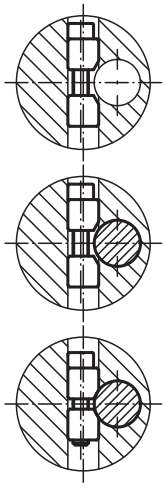

KIPP Shaft clamping units

Order No.	D min.	D max.	D1	D2	D3	G	G1	H	L max.	L1	SW	X	Clamping torque Mx Nm	Tightening torque max. Nm	Order No. assembly tool
K0375.04	6	10	8	8	M4	M5	M2,5	4	27	8	3	2,8	max. 20	2,9	K0375.904
K0375.05	10	15	10	10	M5	M6	M3	5	33	10	4	3,3	max. 45	6	K0375.905
K0375.06	15	20	12	12	M6	M7	M4	6	39	12	5	3,5	max. 100	10	K0375.906
K0375.08	20	30	16	16	M8	M10	M5	8	46	16	6	4	max. 170	25	K0375.908
K0375.10	30	40	20	20	M10	M12	M6	10	53	20	8	4,8	max. 290	46	K0375.910
K0375.12	40	60	25	25	M12	M14	M8	12	70	25	10	5,6	max. 450	82	K0375.912
K0375.16	60	125	30	30	M16	M18	M10	16	81	30	14	7,9	max. 650	206	K0375.916

Centring clamps

round

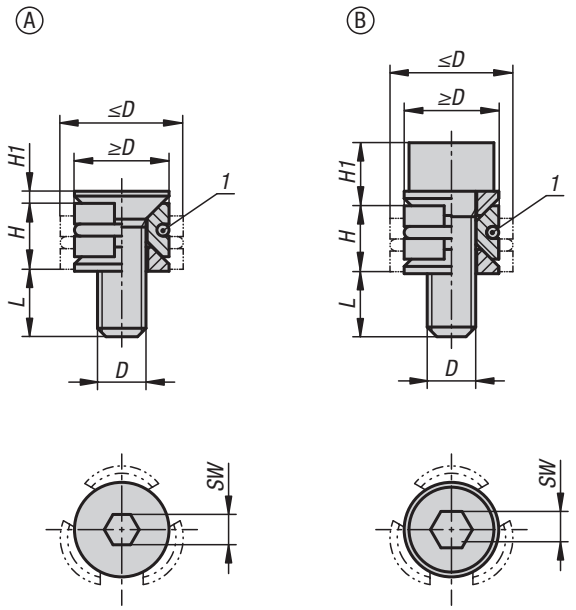

Material:
Carbon steel.

Version:
Hardened (33–39 HRC) and black oxidised.

Sample order:
K1166.10804

Note:
The centring clamp enables a workpiece to be centred and clamped in the bore.
The wedges generate higher clamping forces.
The centring clamp is available with a cap screw or countersunk screw.
Centring clamp with pull-down effect.

Drawing reference:
Form A: with countersunk screw
Form B: with cap screw

Dimension H refers to the height at ≥D.
Dimension L refers to the length at ≤D

1) O-ring

KIPP Centring clamp round

Order No.	Form	D	D min.	D max.	H	H1	L	SW	Clamping force max. kN	Tightening torque Nm
K1166.10804	A	M4 x 12	8	10,3	5,5	0,9	7,3	2,5	0,9	2,1
K1166.11005	A	M5X15	10	12,3	6,4	1,1	9,1	3	1,5	4,3
K1166.11206	A	M6X18	12	16,3	8,6	1,3	11,2	4	2,1	7,3
K1166.11608	A	M8X25	16	22	11,5	1,6	16,2	5	4	18
K1166.20804	B	M4 x 12	8	10,3	5,5	5,1	7,1	3	1,5	2,7
K1166.21005	B	M5X15	10	12,3	6,4	6,2	9	4	2,5	5,4
K1166.21206	B	M6X18	12	16,3	8,6	7,9	10,6	5	5	9,1
K1166.21608	B	M8X25	16	22	11,5	10,4	15,4	6	9	25

Centring clamps

round

Technical information:

- These clamps grip the inside diameter of a workpiece.
- The wedge shape enables high clamping forces on the workpiece.

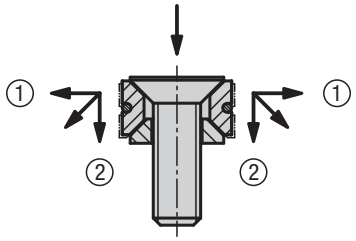

(Jaws exert positive down force)
1 Horizontal thrust against workpiece
2 Vertical thrust prevents the workpiece lifting

Form A:

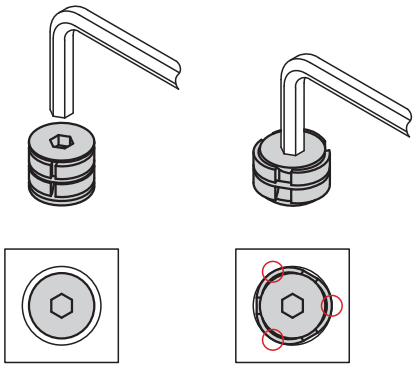

unclamped clamped

Form B:

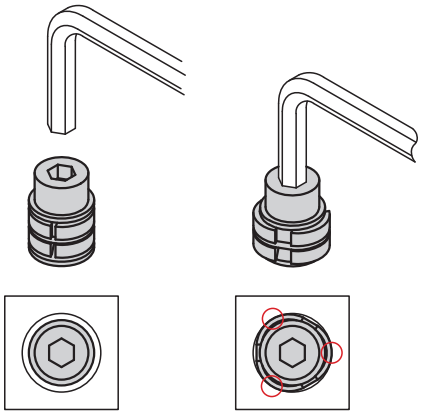

unclamped clamped

Note:
The clamp makes point contact with the bore wall when clamped.

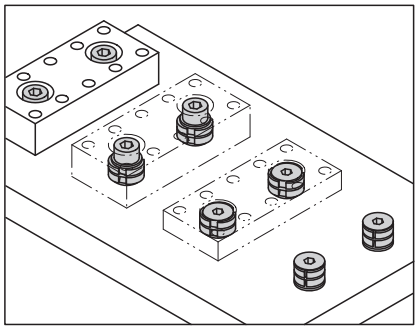

For accurate repeat positioning use these clamps together with a positioning unit.
Clamping is carried out with the centring clamp.

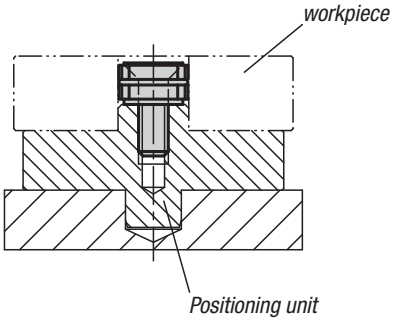

Centring clamps

with ball or hexagon segments

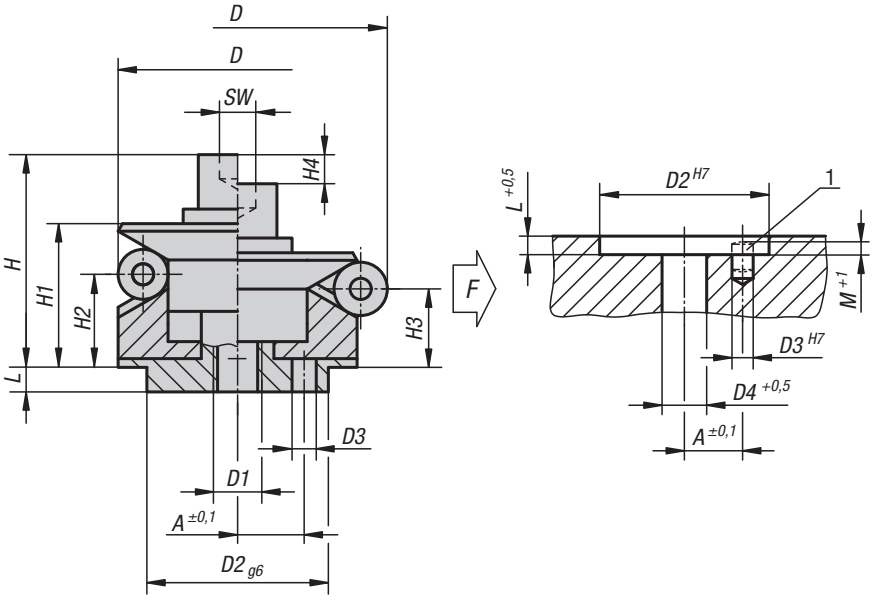

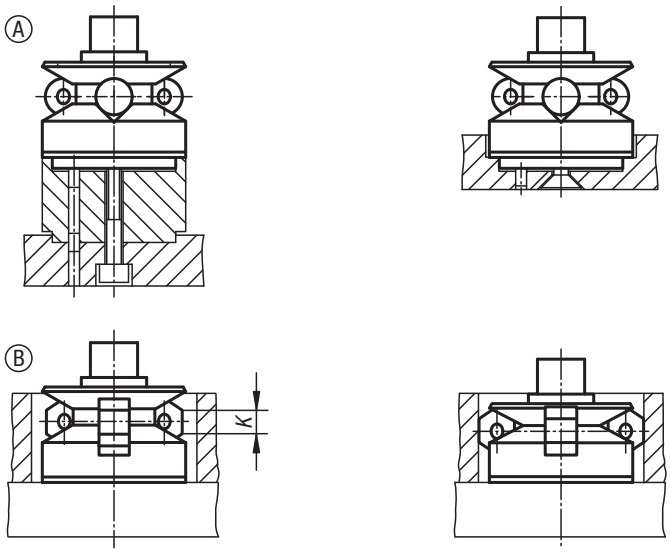

Material:
Body 1.2842.
Ball and hex segments 1.4112.
Tension spring 1.4310.

Version:
Body hardened and black oxidised.
Ball and hex segments hardened and ground.

Sample order:
K0358.101203

Application:
To position and centre existing bores on the machining surface.

Advantages:
- Precise self-centring.
- Distortion free clamping.
- Large spread range.
- Low overall height.

Technical data:
Repetitive accuracy ±0.025
Concentric accuracy ±0.05

Drawing reference:
Form A:
With balls for holes where light marking is acceptable.
Form B:
With hexagons for sensitive hole surfaces.

1) Mounting aid:
pin to accurately position the mandrel segments.

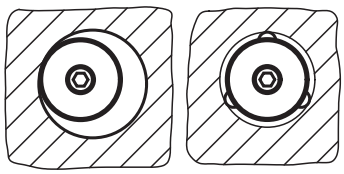

Centring clamps

with ball or hexagon segments

KIPP Centring clamps with ball segments

Order No.	Form	A	D max.	D min.	D1	D2	D3	D4	H	H1	H2	H3	H4	L	M	SW	Ball Ø	No. of balls	Clamping force max. kN	Tightening torque max. Nm
K0358.101203	A	3,5	14,2	11,7	M4	10	1,5	4,3	15	10	4,2	3	1,5	3,5	2,5	3	2,5	3	0,5	5
K0358.101504	A	4,5	18,5	14,5	M4	12	2	4,3	19,5	14,5	9,8	8,6	2,3	5,5	3	3	4	3	3,5	5
K0358.101905	A	5,5	22,5	18,5	M5	15	2,5	5,3	23,5	16,5	11,6	10,4	2,3	7,5	3	4	4	3	4	10
K0358.102306	A	7	26,5	22,5	M6	20	3	6,4	28,8	19,8	14,2	13	2,3	6	4	5	4	3	4,5	17
K0358.102706	A	7	30,5	26,5	M6	20	3	6,4	28,8	19,8	14,2	13	2,3	6	4,5	5	4	3	4,5	17
K0358.103106	A	9	38,5	30,5	M6	25	4	6,4	32,7	23,1	14,2	11,9	4,6	7	4,5	5	8	3	4,5	17
K0358.103908	A	11	46,5	38,5	M8	30	4	8,4	39,2	27,2	17,8	15,5	4,6	7,5	4,5	6	8	6	6,5	43
K0358.104708	A	11	54,5	46,5	M8	30	4	8,4	39,2	27,2	18	15,7	4,6	7,5	4,5	6	8	6	6,5	43
K0358.105510	A	15	70,5	54,5	M10	45	5	10,5	54,6	40,6	23,7	19,1	9,3	9	5,5	8	16	6	8	79
K0358.107112	A	17	86,5	70,5	M12	60	5	13	63,1	46,1	28,3	23,7	9,3	10	5,5	10	16	6	10	141
K0358.108712	A	25	102,5	86,5	M16	60	5	17	73	51	30,2	25,7	9,3	10	5,5	14	16	6	12,5	354

KIPP Centring clamps with hexagon segments

Order No.	Form	A	D min.	D max.	D1	D2	D3	D4	H	H1	H2	H3	H4	L	M	K	SW	No. of hex	Clamping force max. kN	Tightening torque max. Nm
K0358.201504	B	4,5	14,5	18,5	M4	12	2	4,3	19,5	14,5	9,8	8,6	2,3	5,5	3	4	3	3	3,5	5
K0358.201905	B	5,5	18,5	22,5	M5	15	2,5	5,3	23,5	16,5	11,6	10,4	2,3	7,5	3	4	4	3	4	10
K0358.202306	B	7	22,5	26,5	M6	20	3	6,4	28,8	19,8	14,2	13	2,3	6	4	4	5	3	4,5	17
K0358.202706	B	7	26,5	30,5	M6	20	3	6,4	28,8	19,8	14,2	13	2,3	6	4,5	4	5	3	4,5	17
K0358.203106	B	9	30,5	38,5	M6	25	4	6,4	32,7	23,1	14,2	11,9	4,6	7	4,5	8	5	3	4,5	17
K0358.203908	B	11	38,5	46,5	M8	30	4	8,4	39,2	27,2	17,8	15,5	4,6	7,5	4,5	8	6	6	6,5	43
K0358.204708	B	11	46,5	54,5	M8	30	4	8,4	39,2	27,2	18	15,7	4,6	7,5	4,5	8	6	6	6,5	43
K0358.205510	B	15	54,5	70,5	M10	45	5	10,5	54,6	40,6	23,7	19,1	9,3	9	5,5	16	8	6	8	79
K0358.207112	B	17	70,5	86,5	M12	60	5	13	63,1	46,1	28,3	23,7	9,3	10	5,5	16	10	6	10	141
K0358.208712	B	25	86,5	102,5	M16	60	5	17	73	51	30,2	25,7	9,3	10	5,5	16	14	6	12,5	354

Centring clamps

with ball or hexagon segments

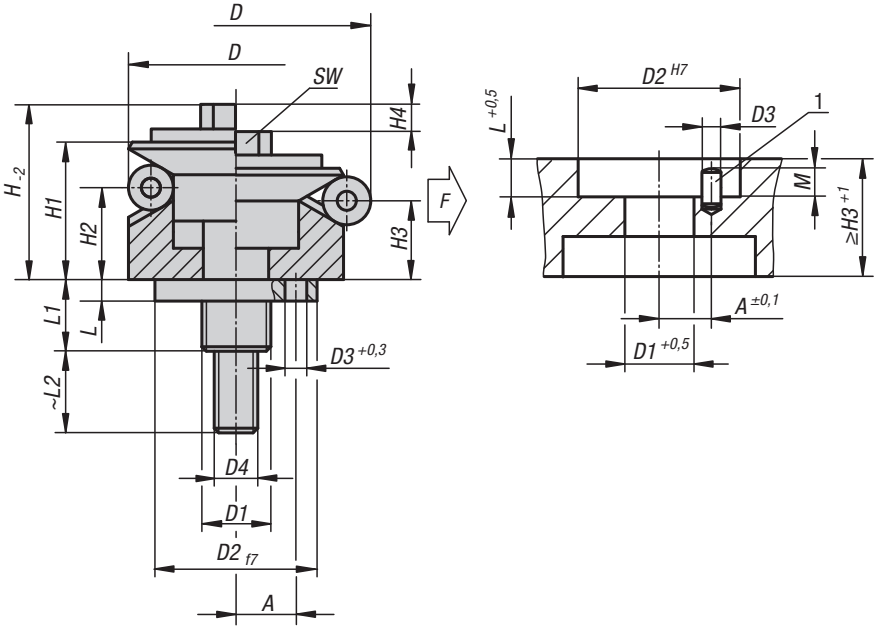

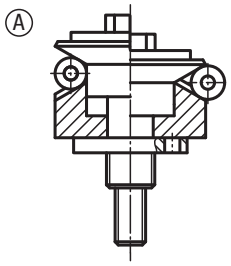

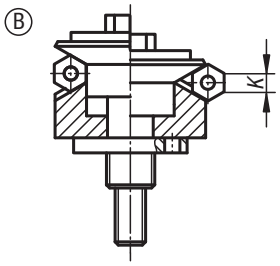

Material:
Body 1.2842.
Ball and hex segments 1.4112.
Tension spring 1.4310.

Version:
Body hardened and black oxidised.
Ball and hex segments hardened and ground.

Sample order:
K0644.0101203

Application:
For centre positioning and clamping in blind holes.
Operated from below, manual or automatic using pneumatics or hydraulics.

Advantages:
- Precise self-centring.
- Distortion free clamping.
- Large spread range.
- Low overall height.
- Positive down force.

Technical data:
Repetitive accuracy ±0.025
Concentric accuracy ±0.05

Drawing reference:
Form A:
With balls for holes where light marking is acceptable.
Form B:
With hexagons for sensitive hole surfaces.

1) Mounting aid:
pin to accurately position the mandrel segments.

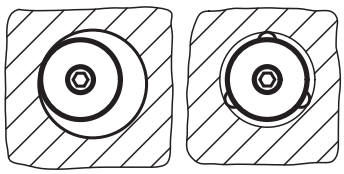

Centring clamps

with ball or hexagon segments

KIPP Centring clamps with ball segments

Order No.	Form	A	D min.	D max.	D1	D2	D3	D4	H	H1	H2	H3	H4	L	L1	L2	M	SW	Ball Ø	No. of balls	Clamping force max. kN	Tightening torque max. Nm
K0644.0101203	A	3,5	11,7	14,2	M5	10	1,5	M3	12,8	10	4,2	3	1,4	3,5	11	10	2	5,5	2,5	3	0,5	2
K0644.0101503	A	4,5	14,5	18,5	M6	12	2	M3	17,3	14,5	9,8	8,6	2,3	5,5	14,1	12	2,5	5,5	4	3	3,5	2
K0644.0101904	A	5,5	18,5	22,5	M8	15	2,5	M4	20,9	16,5	11,6	10,4	2,3	7,5	18,2	14	3,5	7	4	3	4	5
K0644.0102305	A	7	22,5	26,5	M10	20	3	M5	25,4	19,8	14,2	13	2,3	6	17,4	15	3,5	8	4	3	4,5	10
K0644.0102705	A	7	26,5	30,5	M10	20	3	M5	25,4	19,8	14,2	13	2,3	6	17,4	15	3,5	8	4	3	4,5	10
K0644.0103106	A	9	30,5	38,5	M12	25	4	M6	30,3	23,1	14,2	11,9	4,6	7	21,9	20	3,5	10	8	3	4,5	17
K0644.0103906	A	11	38,5	46,5	M12	30	4	M6	34,2	27,2	17,8	15,5	4,6	7,5	22,5	20	4,5	10	8	6	6,5	17
K0644.0104706	A	11	46,5	54,5	M12	30	4	M6	34,2	27,2	18	15,7	4,6	7,5	22,5	20	6,5	10	8	6	6,5	17
K0644.0105508	A	15	54,5	70,5	M14x1,5	45	5	M8	49,9	40,6	23,7	19,1	9,3	9	24,5	32	6,5	13	16	6	8	43
K0644.0107108	A	17	70,5	86,5	M16x1,5	60	5	M8	55,4	46,1	28,3	23,7	9,3	10	29,4	20	6,5	13	16	6	10	43
K0644.0108708	A	25	86,5	102,5	M16x1,5	60	5	M10	61,6	51	30,2	25,7	9,3	10	29,4	25	6,5	17	16	6	12,5	79

KIPP Centring clamps with hexagon segments

Order No.	Form	A	D min.	D max.	D1	D2	D3	D4	H	H1	H2	H3	H4	L	L1	L2	M	K	SW	No. of hex	Clamping force max. kN	Tightening torque max. Nm
K0644.0201503	B	4,5	14,5	18,5	M6	12	2	M3	17,3	14,5	9,8	8,6	1,4	5,5	14,1	12	2,5	4	5,5	3	3,5	2
K0644.0201904	B	5,5	18,5	22,5	M8	15	2,5	M4	20,9	16,5	11,6	10,4	2,3	7,5	18,2	14	3,5	4	7	3	4	5
K0644.0202305	B	7	22,5	26,5	M10	20	3	M5	25,4	19,8	14,2	13	2,3	6	17,4	15	3,5	4	8	3	4,5	10
K0644.0202705	B	7	26,5	30,5	M10	20	3	M5	25,4	19,8	14,2	13	2,3	6	17,4	15	3,5	4	8	3	4,5	10
K0644.0203106	B	9	30,5	38,5	M12	25	4	M6	30,3	23,1	14,2	11,9	4,6	7	21,9	20	3,5	8	10	6	4,5	17
K0644.0203906	B	11	38,5	46,5	M12	30	4	M6	34,2	27,2	17,8	15,5	4,6	7,5	22,5	20	4,5	8	10	6	6,5	17
K0644.0204706	B	11	46,5	54,5	M12	30	4	M6	34,2	27,2	18	15,7	4,6	7,5	22,5	20	6,5	8	10	6	6,5	17
K0644.0205508	B	15	54,5	70,5	M14	45	5	M8	49,9	40,6	23,7	19,1	9,3	9	24,5	32	6,5	16	13	6	8	43
K0644.0207108	B	17	70,5	86,5	M16	60	5	M8	55,4	46,1	28,3	23,7	9,3	10	29,4	20	6,5	16	13	6	10	43
K0644.0208708	B	25	86,5	102,5	M16	60	5	M10	61,6	51	30,2	25,7	9,3	10	29,4	25	6,5	16	16	6	12,5	79

Mounting instructions for eccentric clamp module

Insert by pushing and rotating

Swivel down to clamp

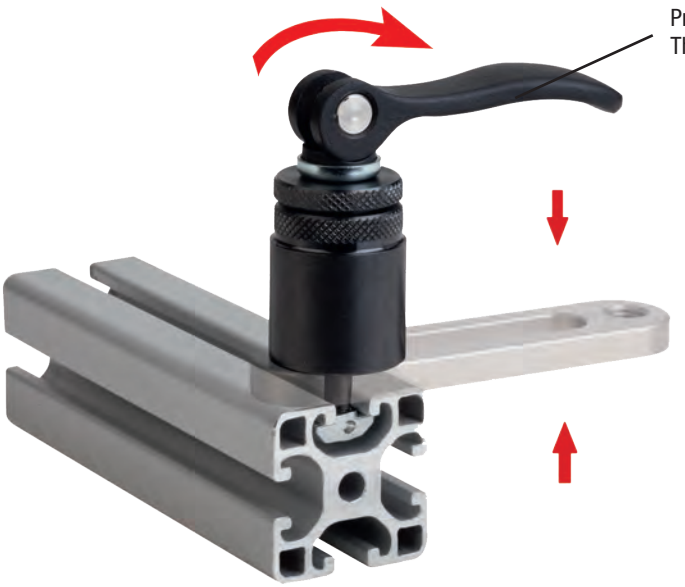

Eccentric clamp modules

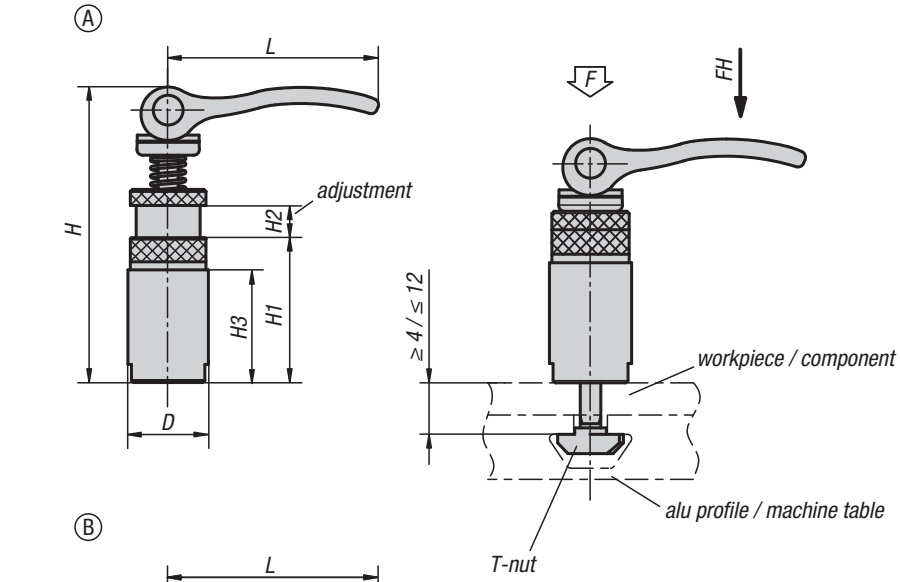

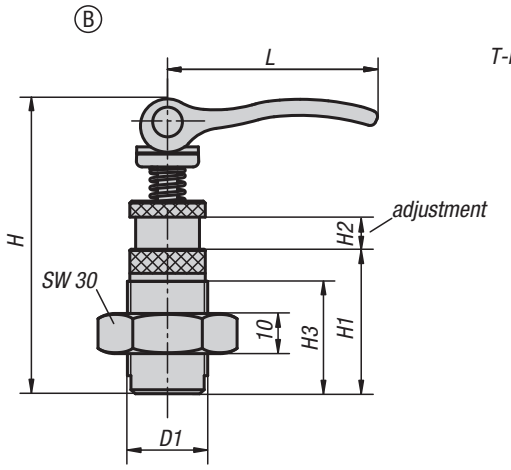

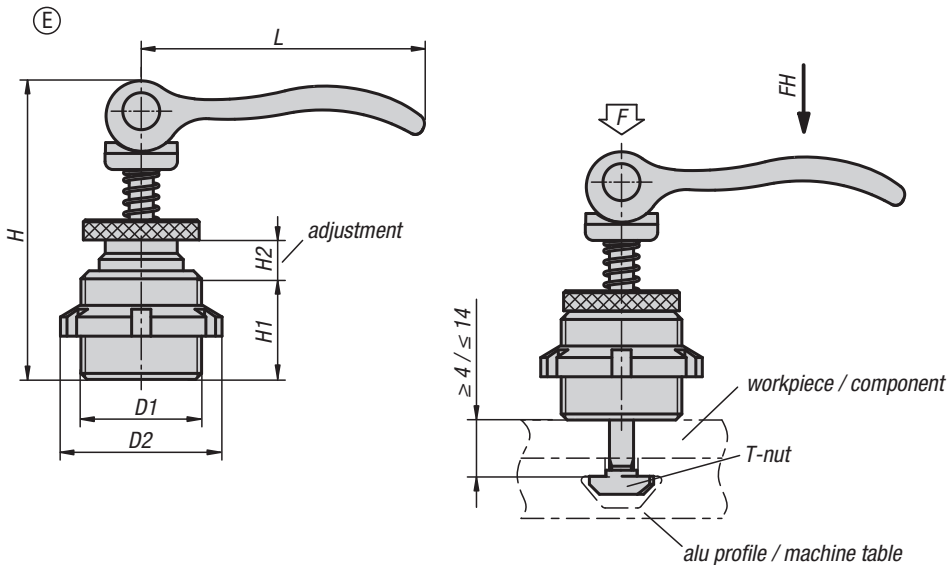

Material:
Body steel.
Cam levers cast aluminium.

Version:
Body black oxidised.
T-nut electro zinc-plated.
Cam levers black powder coated.

Sample order:
K0754.00200808

Note:
The clamp module is inserted into the T-slot from above and secured using the cam lever, no other tools required.

Advantages:
The eccentric clamp modules can be used on conventional aluminium profile systems or on T-slot tables as stops, fasteners or clamps for components and workpieces.

KIPP Eccentric clamp modules

Order No.	Form	D	D1	H	H1	H2	H3	L	suitable for slot width	Clamping force F (kN)	Hand force FH N
K0754.00200808	A	20	-	73,5	36	8	28	52,3	8	2,5	100
K0754.10200808	B	-	M20x1,5	73,5	36	8	28	52,3	8	2,5	100

Eccentric clamp modules

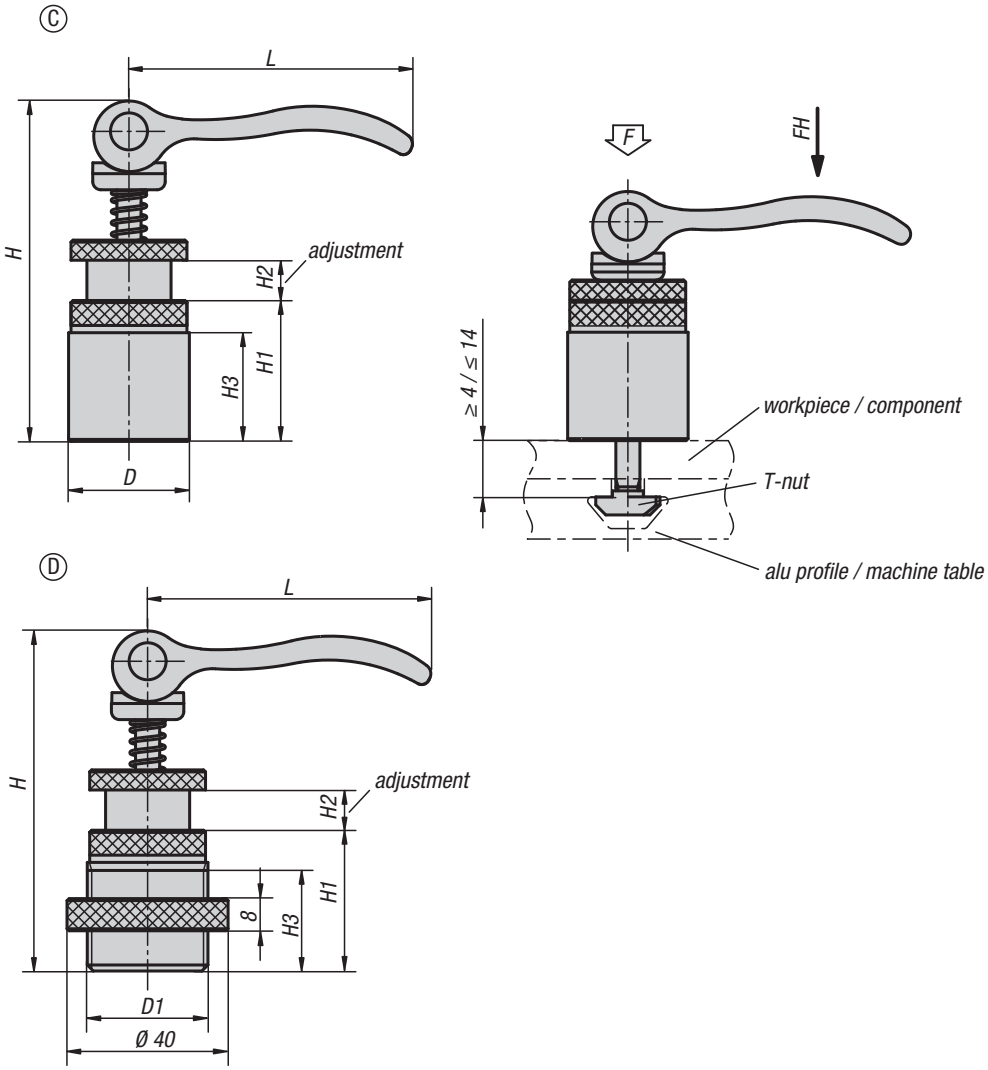

KIPP Eccentric clamp modules

Order No.	Form	D	D1	H	H1	H2	H3	L	suitable for slot width	Clamping force F (kN)	Hand force FH N
K0754.21150606	C	15	-	34	10	6	7	35	6	1,5	90
K0754.21201008	C	20	-	44	13	8	10	52	8	2,5	100
K0754.21301008	C	30	-	84,6	35	10	25	70,4	8	4	120
K0754.31301008	D	-	M30x2	84,6	35	10	25	70,4	8	4	120

Order No.	Form	D1	D2	H	H1	H2	L	suitable for slot width	Clamping force F (kN)	Hand force FH N
K0754.41150706	E	M15X1	25	39	14	7	35	6	1,5	90
K0754.41200908	E	M20X1	32	50	18	9	52	8	2,5	100

Cam clamps

for eccentric clamp modules

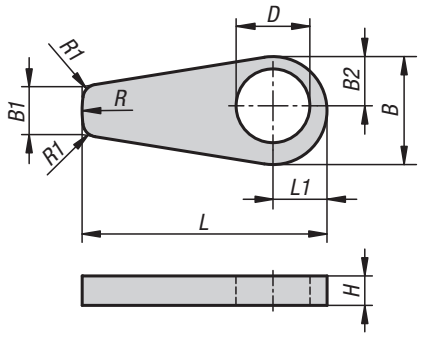

Material:
Steel or POM

Version:
black oxidised. White.

Sample order:
K1212.2008

Note:
Cam clamps for indirect clamping of sensitive parts in combination with pivot bearings or Form C eccentric clamp modules.

Advantages:
Tool-less operation.

KIPP Cam clamps for eccentric clamp modules

Order No.	Main material	B	B1	B2	D	H	L	L1	R	R1
K1212.1506	steel	22,1	10	10,05	15,1	6	50	11,05	22	3
K1212.2008	steel	29,4	13,34	13,37	20,1	8	66,67	14,7	29,4	3
K1212.3010	steel	44,1	20	20,05	30,1	10	100	22,05	44	3
K1212.23010	POM	44,1	20	20,05	30,1	10	100	22,05	44	3

Clamping pin, steel

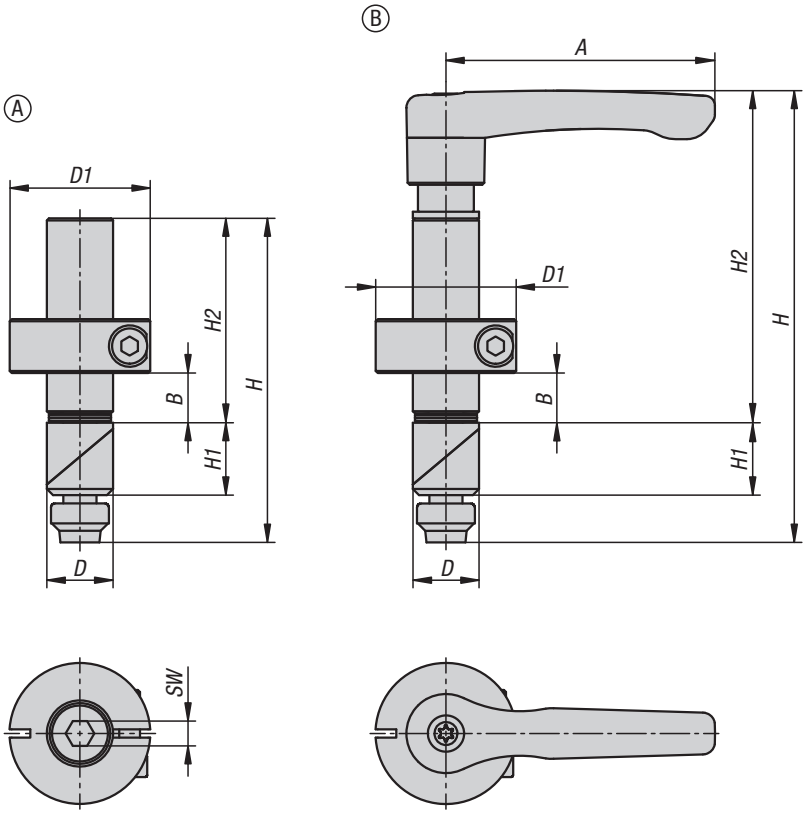

Material:
Handle die-cast zinc acc. to DIN EN 12844.
Locating pin and wedges steel 1.0715.
Shaft collar steel 1.0718.

Version:
Handle black, plastic coated.
Centring pin and shaft collar phosphated.
Wedges black oxidised.
Lasered division marks.

Sample order:
K1503.0016

Note:
The screw is tightened or the clamping lever is turned to expand the two wedges in the hole. The infinitely adjustable shaft collar enables one or more stop elements with various thicknesses to be securely fixated.

Application:
These clamping pins are perfect for fixing standard stop elements with various thicknesses to hole grid boards / welding tables with hole Ø 16 mm or 28 mm.

Advantages:
Infinitely adjustable clamping range of 0-36 mm and 0-75 mm.
Not affected by the diameter or surface quality of the bore (up to H12).
Clamping range can be easily preset using the scale.
Gentle clamping in the bore.
Pull-down effect even with thin table material (≥8 mm or ≥4 mm).
Compatible with conventional stop elements.

KIPP Clamping pin, steel

Order No.	Form	A	D	D1	H	H1	H2	SW	B Clamp range
K1503.0016	A	-	16	34	78	17,5	49	6	0-36
K1503.0028	A	-	28	48	129	28	90	6	0-75
K1503.0116	B	65	16	34	109	17,5	80	-	0-36
K1503.0128	B	80	28	48	168	28	129	-	0-75

Clamping pin, steel or stainless steel

with washer

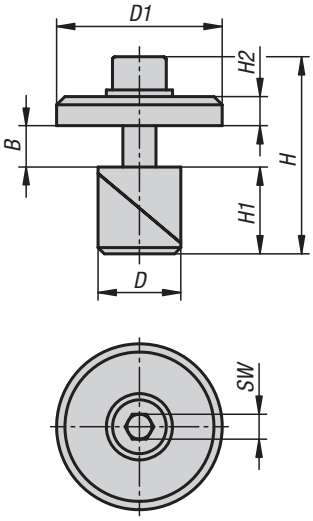

Material:
Washer steel 1.0715.
Wedges steel 1.0715 or stainless steel 1.4305.

Version:
Washer electro zinc-plated.
Wedges black oxidised or blank.

Sample order:
K1504.016

Note:
For fixating adapter plates, angles and plates open on grid hole tables or plates with Ø16 mm, Ø20 mm or Ø28 mm holes. Can also be used as a point end stop for positioning and fixating exchange clamping plates. By turning the cap screw, the lock wedges expand in the bore.

Advantages:
Functions also in thin table material (metal: ≥8 mm or ≥4 mm ; wood ≥18 mm).
Gentle clamping in the bore.
Low height.

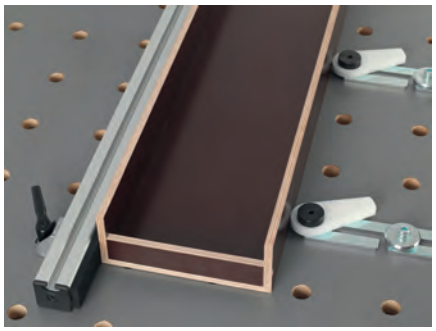

KIPP Clamping pin steel or stainless steel with washer

Order No.	Main material	D	D1	H	H1	H2	SW	B Clamp range
K1504.016	steel	16	40	48	17,5	7	6	0-14
K1504.120	stainless steel	20	40	48	21	7	6	0-10
K1504.028	steel	28	40	68	28	7	6	0-23

Clamping pin, steel or stainless steel

with clamping angle

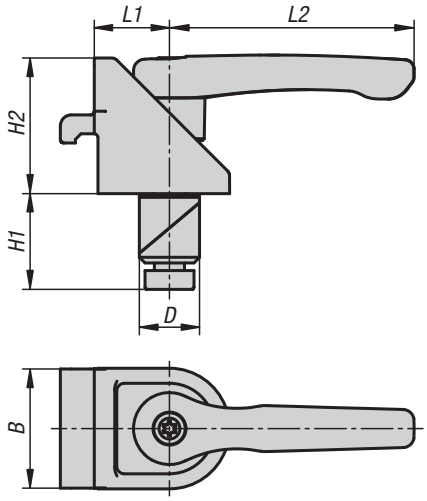

Material:
Handle die-cast zinc acc. to DIN EN 12844.
Clamping angle die-cast zinc.
Wedges steel 1.0715 or stainless steel 1.4305.

Version:
Handle black, plastic coated.
Wedges black oxidised or blank.

Sample order:
K1505.016

Note:
The clamping angles are suitable for fixating aluminium profiles on to grid hole tables or plates with Ø16 mm, Ø20 mm or Ø28 mm holes, e.g. an end stops. Loosen the clamping lever to detract the wedges and enable free rotation and movement. Clamping pins with clamping angles are mostly used in pairs.

Advantages:
Functions also in thin table material (metal: ≥8 mm or ≥4 mm ; wood ≥18 mm).
Gentle clamping in the bore.
Tool-less operation.

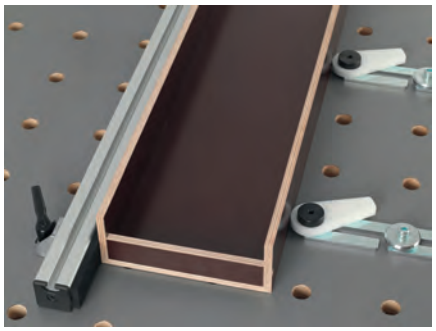

KIPP Clamping pin steel or stainless steel with clamping angle

Order No.	Main material	B	D	H1	H2	L1	L2
K1505.016	steel	32	16	25	36	20	65
K1505.120	stainless steel	32	20	21	36	20	65
K1505.028	steel	32	28	36	36	20	65

Clamping pin, steel or stainless steel

with adapter plate

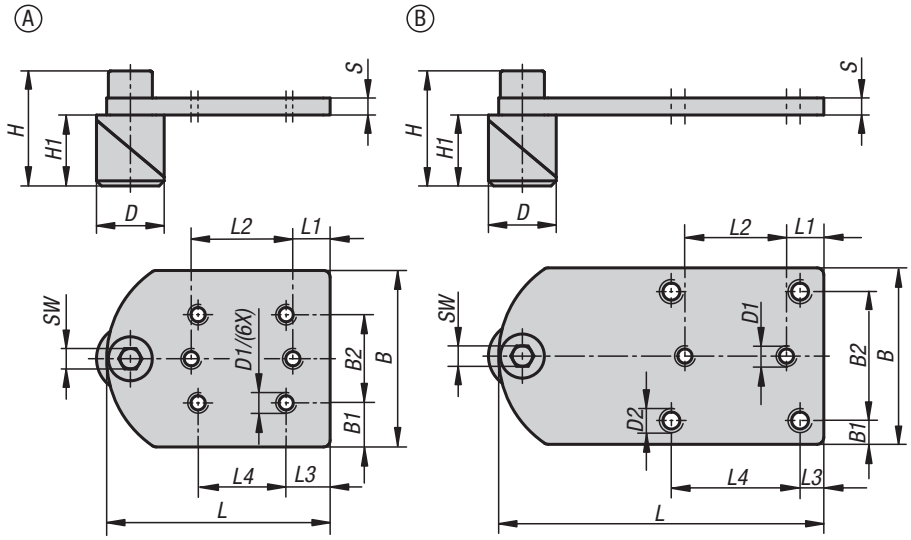

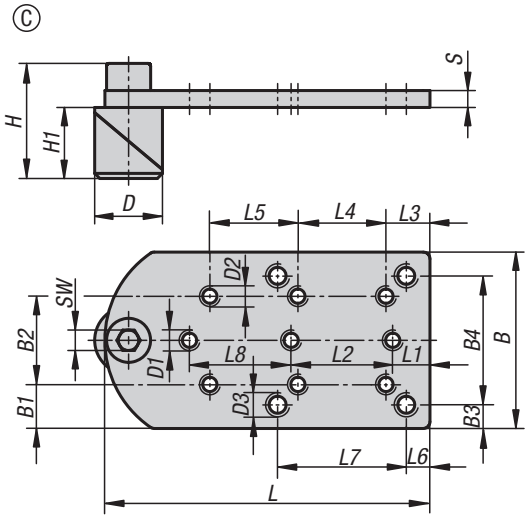

Material:
Adapter plate steel.
Wedges steel 1.0715 or stainless steel 1.4305.

Version:
Adapter plate electro zinc-plated.
Wedges black oxidised or blank.

Sample order:
K1506.0016

Note:
The adapter plates enable the toggle clamp to be compatible with hole pattern 3 or 4, for hole grid plates or plates with Ø16 mm, Ø20 mm or Ø28 mm holes. The clamping pin parts lock in the hole when the cap screw is turned.

KIPP Clamping pin, steel or stainless steel with adapter plate

Order No.	Form	Main material	B	B1	B2	B3	B4	D	D1	D2	D3	H	H1	L	L1	L2	L3	L4	L5	L6	L7	L8	S	SW
K1506.0016	A	steel	52	13	26	-	-	16	M5	-	-	30,5	17,5	66	11	30	13	26	-	-	-	-	5	6
K1506.1020	A	stainless steel	52	13	26	-	-	20	M5	-	-	34	21	66	11	30	13	26	-	-	-	-	5	6
K1506.0028	A	steel	52	13	26	-	-	28	M5	-	-	41	28	66	11	30	13	26	-	-	-	-	5	6
K1506.0116	B	steel	52	7	38	-	-	16	M5	M6	-	30,5	17,5	96	11	30	7	38	-	-	-	-	5	6
K1506.1120	B	stainless steel	52	7	38	-	-	20	M5	M6	-	34	21	96	11	30	7	38	-	-	-	-	5	6
K1506.0128	B	steel	52	7	38	-	-	28	M5	M6	-	41	28	96	11	30	7	38	-	-	-	-	5	6
K1506.0216	C	steel	52	13	26	7	38	16	M5	M5	M6	30,5	17,5	96	11	30	13	26	26	7	38	30	5	6
K1506.1220	C	stainless steel	52	13	26	7	38	20	M5	M5	M6	34	21	96	11	30	13	26	26	7	38	30	5	6
K1506.0228	C	steel	52	13	26	7	38	28	M5	M5	M6	41	28	96	11	30	13	26	26	7	38	30	5	6

Pivot bearing, steel

with external thread

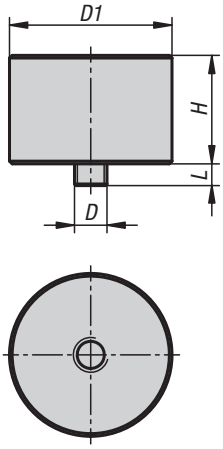

Material:
Pivot bearing steel 1.0715.
Threaded pin steel.

Version:
Pivot bearing black oxidised.Screw electro zinc-plated.

Sample order:
K1507.3006X04

Note:
Pivot bearings are used in combination with plates and a cam clamp for indirect clamping.

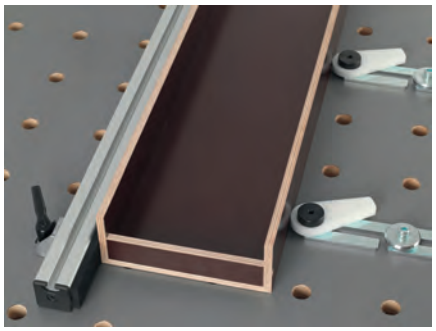

KIPP Pivot bearing steel, with external thread

Order No.	D	D1	H	L
K1507.3006X04	M6	30	20	4

Plate, steel

open

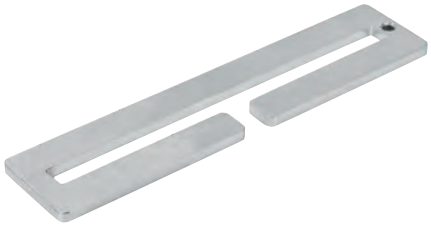

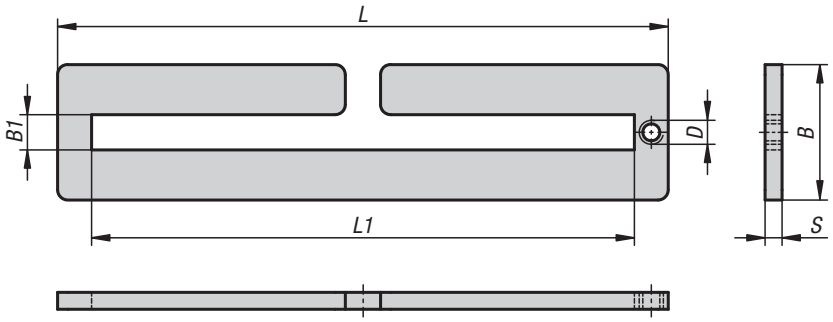

Material:
Steel.

Version:
Electro zinc-plated and trivalent blue passivated.

Sample order:
K1508.0180X40

Note:
Plates can be used in combination with a pivot bearing and cam clamp for indirect clamping. The plates are fastened to grid hole tables using clamping pins and washers. They can also be clamped to machine slot tables by combining with eccentric clamp modules.

Advantages:
Flexible movement and positioning.
infinitely adjustable

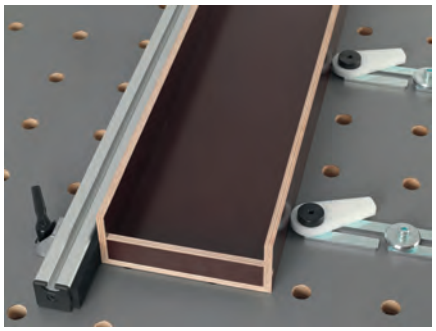

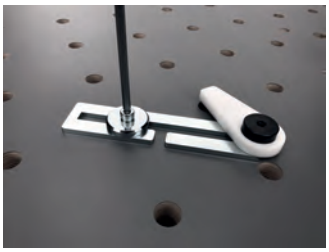

KIPP Plates steel, open

Order No.	B	B1	D	L	L1	S
K1508.0180X40	40	10,4	M6	180	160	5

Angle, steel

open

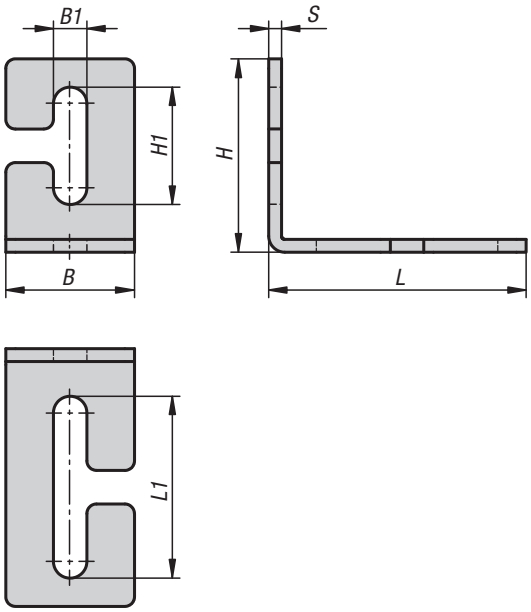

Material:
Steel.

Version:
Electro zinc-plated and trivalent blue passivated.

Sample order:
K1509.0804060

Note:
The angle can also be used as an end stop on grid hole and slot tables. Fine adjustment is possible when used in combination with knurled screws. The angles are fastened to grid hole tables using clamping pins and washers. They can also be clamped to machine slot tables by combining with eccentric clamp modules.

Advantages:
Flexible movement and positioning.
The opening enables easy assembly.
Infinitely adjustable

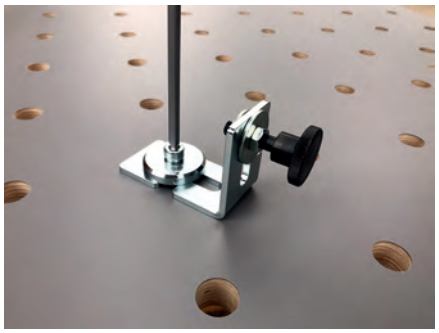

KIPP Angle, steel, open

Order No.	B	B1	H	H1	L	L1	S
K1509.0804060	40	10,4	60	36	80	56	4

Notes