Support elements, locating elements, stop elements

Self-aligning pads

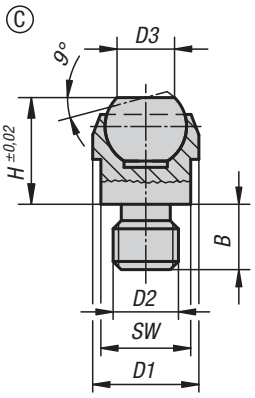

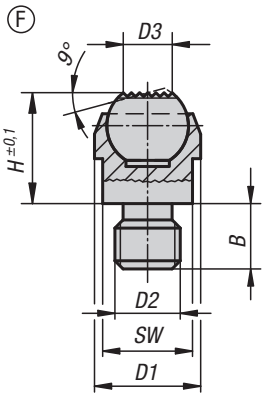

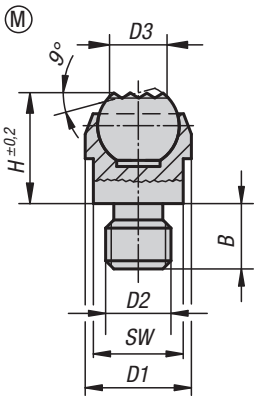

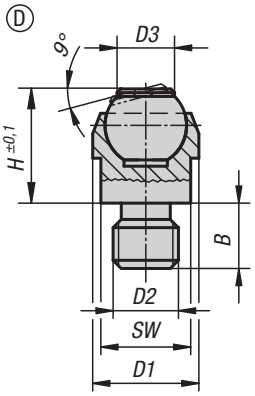

Material:
Body carbon steel.
Ball, ball bearing steel 1.2067.
Form D: Ball with POM insert.
Form H: Ball with POM insert.
Form K: Ball with carbide insert.
Form M has a carbide ball.

Version:
Body tempered and phosphated.
Ball hardened.
Form M ball nickel plated.

Sample order:
K0282.120

Note:
Self-aligning pads serve as stops, supports and thrust pads in fixture constructions.

Ball secured against rotation.

* Valid only if the minimum bore depth is observed.

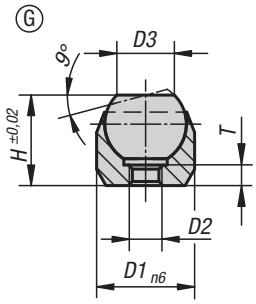

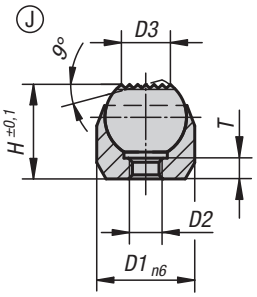

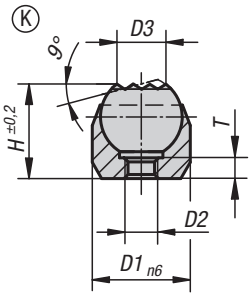

Drawing reference:
Form C: with male thread, flattened ball, smooth.
Form D: with male thread, flattened ball, with POM insert.
Form F: with male thread, flattened ball, diamond grip.
Form M: with male thread, flattened ball, with carbide insert.
Form G: press fit, flattened ball, smooth.
Form H: press fit, flattened ball, with POM insert.
Form J: press fit, flattened ball, diamond grip.
Form K: press fit, flattened ball, with carbide insert.

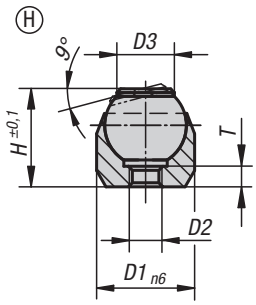

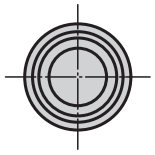

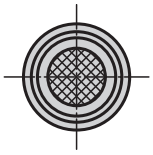

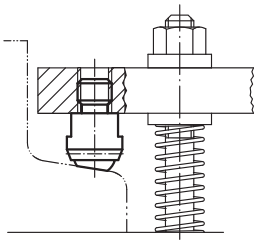

KIPP Form C, with male thread, flattened ball, plain

Order No.	Form	B	D1	D2	D3	H	Ball-Ø	SW	Load rating max. kN (static load only)
K0282.108	C	8	13	M8	7,2	13	10	11	10
K0282.110	C	10	20	M10	10,5	18	16	17	25
K0282.112	C	12	20	M12	10,5	18	16	17	25
K0282.116	C	16	30	M16	20	27	25	27	90
K0282.120	C	20	50	M20	34,5	35	40	41	165

Self-aligning pads

KIPP Form D, with male thread, flattened ball, with POM insert

Order No.	Form	B	D1	D2	D3	H	Ball-Ø	SW	Load rating max. kN (static load only)
K0282.208	D	8	13	M8	7,9	13	10	11	10
K0282.210	D	10	20	M10	12,7	18	16	17	25
K0282.212	D	12	20	M12	12,7	18	16	17	25

KIPP Form F, male thread, flattened ball, diamond grip

Order No.	Form	B	D1	D2	D3	H	Ball-Ø	SW	Load rating max. kN (static load only)
K0282.308	F	8	13	M8	7,2	13	10	11	10
K0282.310	F	10	20	M10	10,5	18	16	17	25
K0282.312	F	12	20	M12	10,5	18	16	17	25
K0282.316	F	16	30	M16	20	27	25	27	90
K0282.320	F	20	50	M20	34,5	35	40	41	165

KIPP Form M, male thread, flattened ball, with carbide insert

Order No.	Form	B	D1	D2	D3	H	Ball-Ø	SW	Load rating max. kN (static load only)
K0282.908	M	8	13	M8	7,7	13,3	10	11	10
K0282.910	M	10	20	M10	12	18	16	17	25
K0282.912	M	12	20	M12	12	18	16	17	25

KIPP Form G, press fit, flattened ball, flat face

Order No.	Form	D1	D2	D3	H	T	Ball-Ø	Receiving hole	Load rating max. kN (static load only)
K0282.403	G	12	M3	7,2	11	3,5	10	ø 12 H7X6 min.	10*
K0282.404	G	18	M4	10,5	17	4,4	16	ø 18 H7X8 min.	25*
K0282.405	G	28	M5	20	25	6,3	25	ø 28 H7X13 min.	90*

KIPP Form H, press fit, flattened ball, with POM insert

Order No.	Form	D1	D2	D3	H	T	Ball-Ø	Receiving hole	Load rating max. kN (static load only)
K0282.503	H	12	M3	7,9	11	3	10	ø 12 H7X6 min.	10*
K0282.504	H	18	M4	12,7	17	4	16	ø 18 H7X8 min.	25*
K0282.505	H	28	M5	19,05	25	6	25	ø 28 H7X13 min.	90*

KIPP Form J, press fit, flattened ball, diamond grip

Order No.	Form	D1	D2	D3	H	T	Ball-Ø	Receiving hole	Load rating max. kN (static load only)
K0282.603	J	12	M3	7,2	11	3,5	10	ø 12 H7X6 min.	10*
K0282.604	J	18	M4	10,5	17	4,4	16	ø 18 H7X8 min.	25*
K0282.605	J	28	M5	20	25	6,3	25	ø 28 H7X13 min.	90*

KIPP Form K, press fit, flattened ball, with carbide insert

Order No.	Form	D1	D2	D3	H	T	Ball-Ø	Receiving hole	Load rating max. kN (static load only)
K0282.803	K	12	M3	7,9	11	3	10	ø 12 H7X6 min.	10*
K0282.804	K	18	M4	12,7	17	4	16	ø 18 H7X8 min.	25*
K0282.805	K	28	M5	19,05	25	6	25	ø 28 H7X13 min.	90*

Self-aligning pads

swivel angle 12°

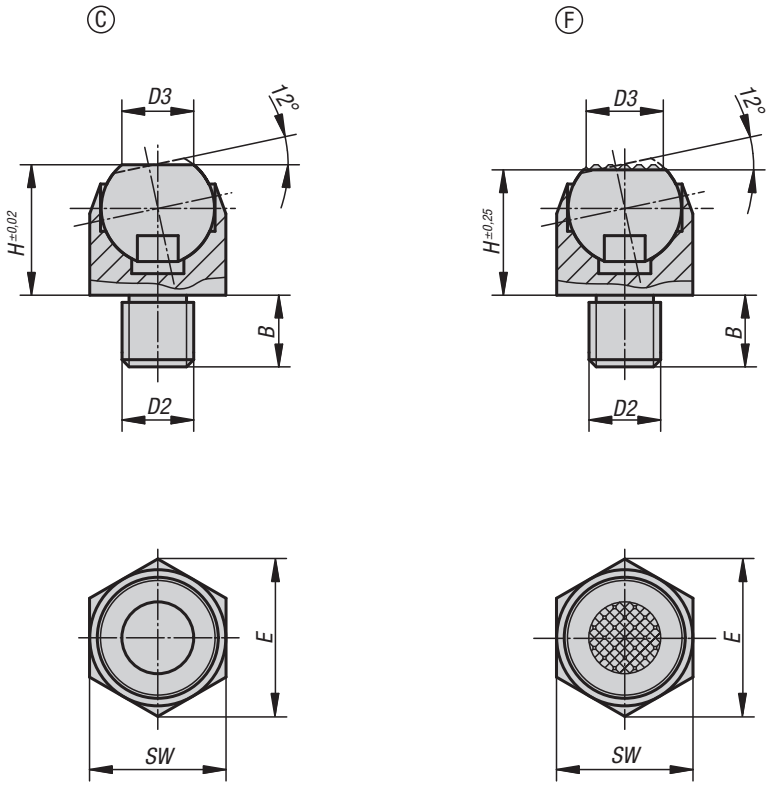

Material:
Body carbon steel.
Ball, ball-bearing steel 1.3505.

Version:
Body tempered.
Ball hardened (50 - 55 HRC).

Sample order:
K0302.106

Note:
Self-aligning pads serve as stops, supports and thrust pads in fixture construction. They can also be installed in existing clamping devices, e.g. arness clamps.

Ball is secured against rotation.

Drawing reference:
Form C: male thread, smooth flattened ball
Form F: male thread, serrated flattened ball

KIPP Self-aligning pads swivel angle 12°

Order No. Form C	Order No. Form F	B	D2	D3	H	E	SW	Ball-Ø	Load rating max. kN (static load only)
K0302.106	**K0302.306**	7	M6	6,7	13	14,5	13	10	10
K0302.108	**K0302.308**	8	M8	6,7	13	14,5	13	10	10
K0302.110	**K0302.310**	10	M10	10	18	21,9	19	16	25
K0302.112	**K0302.312**	12	M12	10	18	21,9	19	16	25
K0302.116	**K0302.316**	16	M16	20	27	33	30	24	90
K0302.120	**K0302.320**	20	M20	20	27	33	30	24	90

Self-aligning pads

swivel angle 14° and 20°

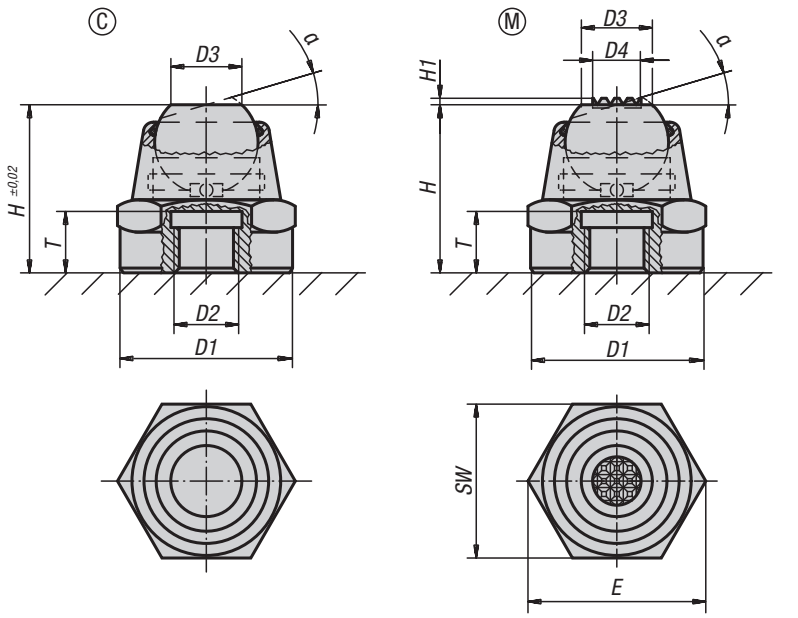

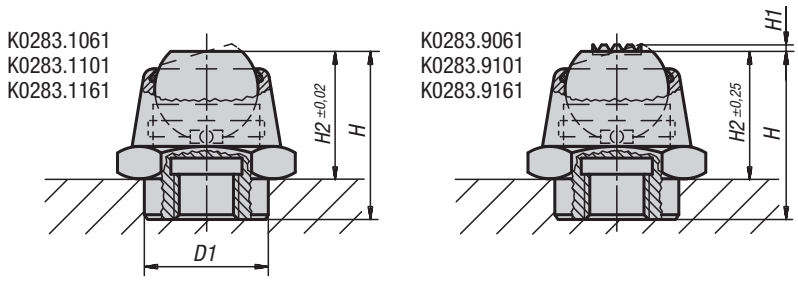

Material:
Body steel.
Ball rust and acid resistant steel.
Form M with carbide insert.

Version:
Body black oxidised.
Ball bright.

Sample order:
K0283.108

Note:
Self-aligning pads are used to support and clamp unmachined and machined workpieces. They also serve as stops, supports and thrust pads in fixture and toolmaking.
Grub screws or threaded studs can be screwed and glued into thread D3 making a self-aligning pad with external thread.

Ball secured against rotation.

Advantages:
- Self-aligning pads can be swiveled.
- High load forces can be absorbed.
- The built-in o-ring keeps dirt and foreign particles out, which in turn guarantees reliable operation.

KIPP Form C, flattened ball, flat face

Order No.	Form	α	D1	D2	D3	H	H2	T	E	SW	Ball-Ø	Load rating max. kN (static load only)
K0283.1061	C	14°	12	M6	7	17,5	12,5	6	19,6	17	10	14
K0283.106	C	14°	16	M6	7	17,5	-	6	19,6	17	10	14
K0283.108	C	20°	22	M8	11	26	-	9	27,7	24	16	34
K0283.1101	C	20°	18	M10	11	26	20	9	27,7	24	16	34
K0283.110	C	20°	22	M10	11	26	-	9	27,7	24	16	34
K0283.112	C	20°	22	M12	11	26	-	9	27,7	24	16	34
K0283.1161	C	20°	26	M16	18	40	30	15	41,6	36	25	90
K0283.116	C	20°	34	M16	18	40	-	15	41,6	36	25	90
K0283.120	C	20°	34	M20	18	40	-	15	41,6	36	25	90

KIPP Form M, flattened ball, carbide steel diamond grip

Order No.	Form	α	D1	D2	D3	D4	H	H1	H2	E	T	Ball-Ø	SW	Load rating max. kN (static load only)
K0283.9061	M	14°	12	M6	7	5	17,5	0,6	12,5	19,6	6	10	17	14
K0283.906	M	14°	16	M6	7	5	17,5	0,6	-	19,6	6	10	17	14
K0283.908	M	20°	22	M8	11	7,5	26	0,8	-	27,7	9	16	24	34
K0283.9101	M	20°	18	M10	11	7,5	26	0,8	20	27,7	9	16	24	34
K0283.910	M	20°	22	M10	11	7,5	26	0,8	-	27,7	9	16	24	34
K0283.912	M	20°	22	M12	11	7,5	26	0,8	0,8	27,7	9	16	24	34
K0283.9161	M	20°	26	M16	18	13	40	0,9	30	41,6	15	25	36	90
K0283.916	M	20°	34	M16	18	13	40	0,9	0,9	41,6	15	25	36	90
K0283.920	M	20°	34	M20	18	13	40	0,9	-	41,6	15	25	36	90

Self-aligning pads

with o-ring

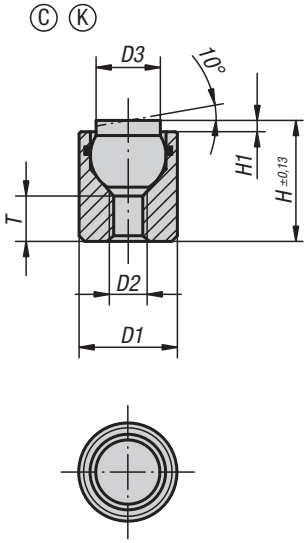

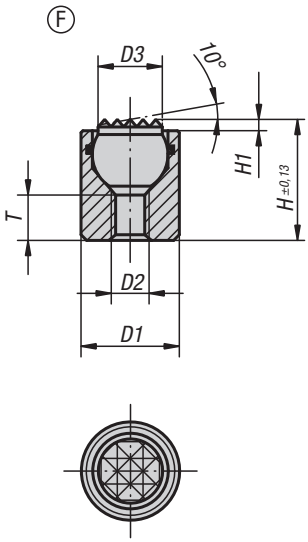

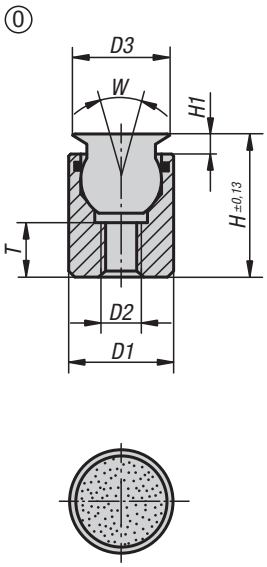

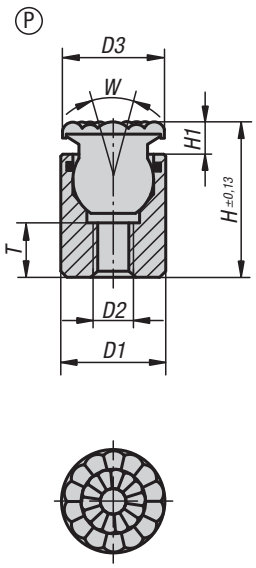

Material:
Body carbon steel.
Ball:
Form C, F tool steel.
Form K POM.
Form O stainless steel diamond impregnated.
Form P stainless steel with polyurethane face.

Version:
Body tempered, black oxidised.
Ball:
Form C, F hardened, black oxidised.
Form K POM ball, white.
Form O surface comparable to 100 grade abrasive grit.
Form P polyurethane, hardness 60 Shore.

Sample order:
K0284.704X012

Note:
Self-aligning pads are used to support and clamp unmachined and machined workpieces.
They also serve as stops, supports and thrust pads in fixtures and toolmaking.

Ball secured against rotation.

Form O: The abrasive diamond surface is fused firmly to the ball. It is ideally suited to supporting smooth or slippery applications with a minimum of clamping pressure. This allows the diamond particles to get a firm grip on a very small area with minimum damage to the surface. The diamond surface offers excellent wear resistance.

Form P: The polyurethane surface is permanently vulcanised on the ball. It is abrasion-resistant and does not discolour. Offers optimum protection against damage to delicate surfaces. The pearl-like surface gives a firm grip and allows air to escape so as to prevent any suction effect between the contact surface and the self-aligning pads.

Advantages:
The built-in O-ring holds the ball in place and keeps dirt and foreign particles out ensuring smooth and even movement.

Self-aligning pads

with o-ring

KIPP Form C, flattened steel ball, smooth

Order No.	Form	D1	D2	D3	H	H1	T	Ball-Ø	Load rating max. kN (static load only)
K0284.104X012	C	10	M4	6	12	1,5	4,5	7	12
K0284.104X025	C	10	M4	6	25	1,5	12	7	12
K0284.105X016	C	13	M5	8,5	16	1,5	5	10	20
K0284.105X025	C	13	M5	8,5	25	1,5	12	10	20

KIPP Form F, flattened steel ball, diamond grip

Order No.	Form	D1	D2	D3	H	H1	T	Ball-Ø	Load rating max. kN (static load only)
K0284.304X012	F	10	M4	6	12	1,5	4,5	7	12
K0284.304X025	F	10	M4	6	25	1,5	12	7	12
K0284.305X016	F	13	M5	8,5	16	1,5	5	10	20
K0284.305X025	F	13	M5	8,5	25	1,5	12	10	20

KIPP Form K, flattened POM ball, smooth

Order No.	Form	D1	D2	D3	H	H1	T	Ball-Ø	Load rating max. kN (static load only)
K0284.704X012	K	10	M4	6	12	1,5	4,5	7	2
K0284.704X025	K	10	M4	6	25	1,5	12	7	2
K0284.705X016	K	13	M5	8,5	16	1,5	5	10	4
K0284.705X025	K	13	M5	8,5	25	1,5	12	10	4

KIPP Form O, stainless-steel ball, diamond impregnated

Order No.	Form	D1	D2	D3	H	H1	T	W	Ball-Ø	Load rating max. kN (static load only)
K0284.504X012	O	10	M4	8	12,5	2	3,5	28	7	11,5
K0284.504X025	O	10	M4	8	25,5	2	9	28	7	11,5
K0284.505X017	O	13	M5	11	17,5	3	6,5	28	10	19,8
K0284.505X026	O	13	M5	11	26,5	3	9	28	10	19,8
K0284.506X021	O	17	M6	14	21	3	7,5	28	13	27,4
K0284.508X024	O	19	M8	19	24	4	8,5	24	15	38,6
K0284.510X028	O	24	M10	21	28	4	9	24	20	58,3

KIPP Form P, stainless-steel ball with polyurethane face

Order No.	Form	D1	D2	D3	H	H1	W	T	Ball-Ø
K0284.604X014	P	10	M4	10	14,5	4	28	3,5	7
K0284.604X027	P	10	M4	10	27,5	4	28	9	7
K0284.605X019	P	13	M5	13	19,5	5	28	6,5	10
K0284.605X028	P	13	M5	13	28,5	5	28	9	10
K0284.606X023	P	17	M6	16	23	5	28	7,5	13
K0284.608X026	P	19	M8	21	26	6	24	8,5	15
K0284.610X030	P	24	M10	23	30	6	24	9	20

Self-aligning pads

with o-ring and exchangeable inserts

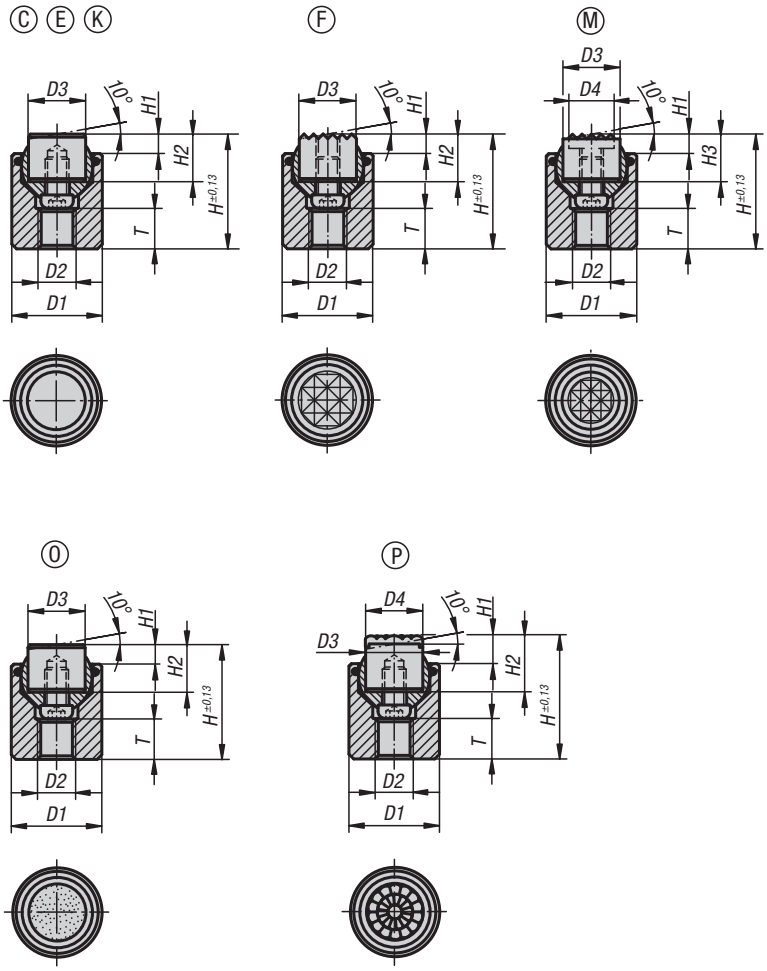

Material:
Body carbon steel.
Ball rust and acid resistant steel.
Inserts:
Form C, F, M tool steel
Form K POM
Form E stainless steel.
Form O stainless steel diamond impregnated.
Form P stainless steel with polyurethane surface.

Version:
Body tempered, black oxidised.
Ball hardened, bright.
Inserts:
Form C, F hardened, black oxidised.
Form M with carbide serrations, black oxidised.
Form K white.
Form E hardened, bright.
Form O diamond impregnated surface comparable to 100 grade abrasive grit.
Form P polyurethane surface, hardness 60 Shore.

Sample order:
K0285.736X036

Note:
Self-aligning pads are used to support and clamp unmachined and machined workpieces.
In addition, they serve as stops, supports and thrust pads in fixtures and toolmaking.
The ball can be removed from the housing by applying light pressure to the socket head screw.

Ball secured against rotation.

Advantages:
Highly cost-effective as inserts can be exchanged.
The built-in O-ring holds the ball in place and keeps dirt and foreign particles out, ensuring uniform movement.

KIPP Self-aligning pads with o-ring and exchangeable inserts

Order No.	Form	D1	D2	D3	H	H1	H2	T	Ball-Ø	Load rating max. kN (static load only)	Order No. steel insert
K0285.117X022	C	17	M6	10	22	4	10	7	13	28	K0385.10108
K0285.119X024	C	19	M8	12	24	4	10	8	15	39	K0385.12108
K0285.124X028	C	24	M10	16	28	4	10	8	20	58	K0385.16108
K0285.130X030	C	30	M12	20	30	4	10	9	23	95	K0385.20108
K0285.136X036	C	36	M12	25	36	4	10	11	28	136	K0385.25108

Order No.	Form	D1	D2	D3	H	H1	H2	T	Ball-Ø	Load rating max. kN (static load only)	Order No. stainless steel insert
K0285.217X022	E	17	M6	10	22	4	10	7	13	28	K0385.10102
K0285.219X024	E	19	M8	12	24	4	10	8	15	39	K0385.12102
K0285.224X028	E	24	M10	16	28	4	10	8	20	58	K0385.16102
K0285.230X030	E	30	M12	20	30	4	10	9	23	95	K0385.20102
K0285.236X036	E	36	M12	25	36	4	10	11	28	136	K0385.25102

Order No.	Form	D1	D2	D3	H	H1	H2	T	Ball-Ø	Load rating max. kN (static load only)	Order No. gripper
K0285.317X022	F	17	M6	10	22	4	10	7	13	28	K0385.1010
K0285.319X024	F	19	M8	12	24	4	10	8	15	39	K0385.1210
K0285.324X028	F	24	M10	16	28	4	10	8	20	58	K0385.1610
K0285.330X030	F	30	M12	20	30	4	10	9	23	95	K0385.2010
K0285.336X036	F	36	M12	25	36	4	10	11	28	136	K0385.2510

Order No.	Form	D1	D2	D3	H	H1	H2	T	Ball-Ø	Load rating max. kN (static load only)	Order No. POM insert
K0285.717X022	K	17	M6	10	22	4	10	7	13	4	K0385.10109
K0285.719X024	K	19	M8	12	24	4	10	8	15	7	K0385.12109
K0285.724X028	K	24	M10	16	28	4	10	8	20	14	K0385.16109
K0285.730X030	K	30	M12	20	30	4	10	9	23	27	K0385.20109
K0285.736X036	K	36	M12	25	36	4	10	11	28	47	K0385.25109

Order No.	Form	D1	D2	D3	D4	H	H1	H2	Ball-Ø	Load rating max. kN (static load only)	Order No. gripper
K0285.917X022	M	17	M6	10	7,9	22	4	10	13	28	K0385.10107
K0285.919X024	M	19	M8	12	9,5	24	4	10	15	39	K0385.12107
K0285.924X028	M	24	M10	16	12,7	28	4	10	20	58	K0385.16107
K0285.930X030	M	30	M12	20	15,9	30	4	10	23	95	K0385.20107
K0285.936X036	M	36	M12	25	19	36	4	10	28	136	K0385.25107

Order No.	Form	D1	D2	D3	H	H1	H2	T	Ball-Ø	Load rating max. kN (static load only)	Order No. stainless steel insert, diamond surface
K0285.517X022	O	17	M6	10	22	4	10	7	13	28	K0385.10105
K0285.519X024	O	19	M8	12	24	4	10	8	15	39	K0385.12105
K0285.524X028	O	24	M10	16	28	4	10	8	20	58	K0385.16105
K0285.530X030	O	30	M12	20	30	4	10	9	23	95	K0385.20105
K0285.536X036	O	36	M12	25	36	4	10	11	28	136	K0385.25105

Order No.	Form	D1	D2	D3	D4	H	H1	H2	T	Ball-Ø	Order No. stainless steel insert, polyurethane surface
K0285.617X024	P	17	M6	10	10	24	6	12	7	13	K0385.10126
K0285.619X026	P	19	M8	12	13	26	6	12	8	15	K0385.12126
K0285.624X030	P	24	M10	16	16	30	6	12	8	20	K0385.16126
K0285.630X032	P	30	M12	20	21	32	6	12	9	23	K0385.20126
K0285.636X038	P	36	M12	25	27	38	6	12	11	28	K0385.25126

Self-aligning pads

self-righting

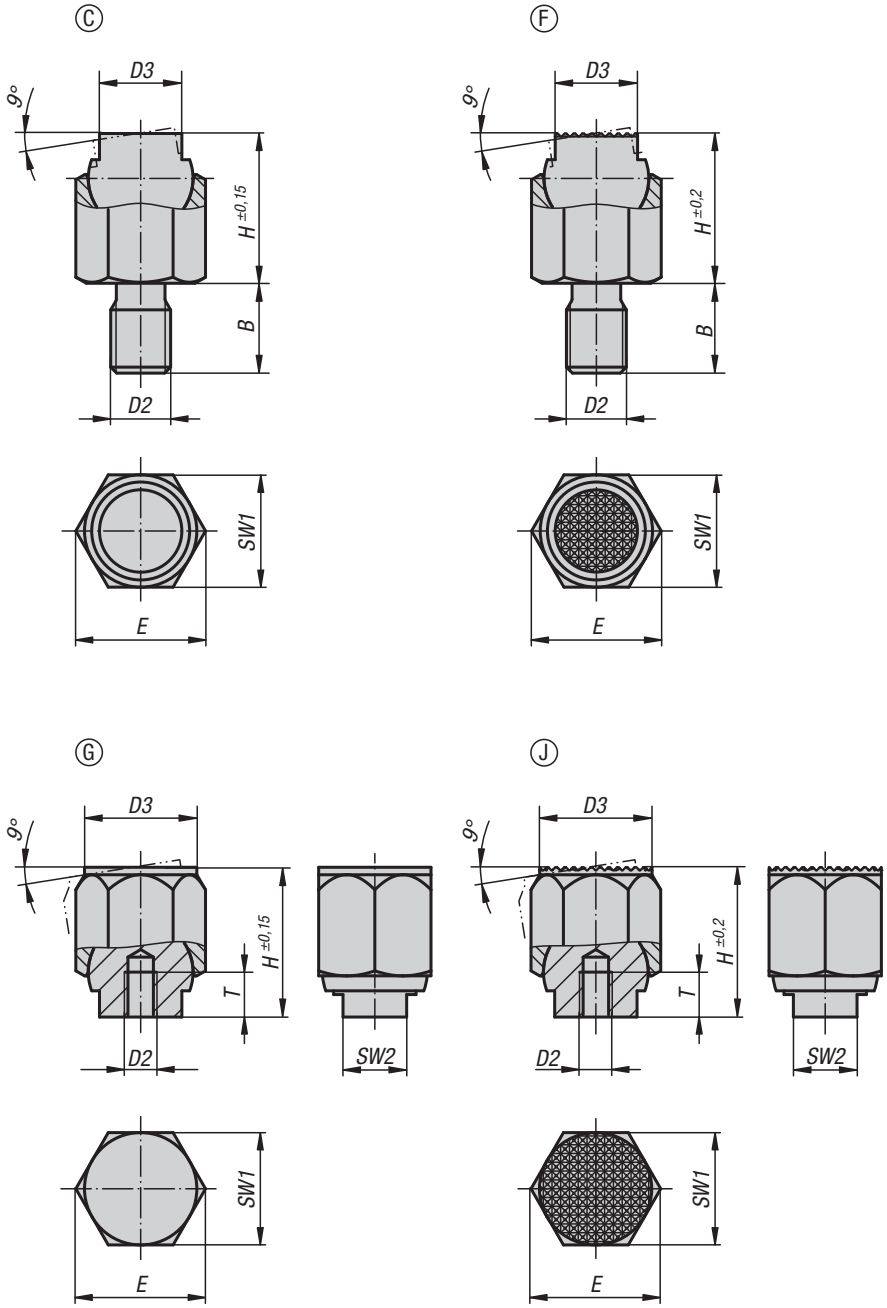

Material:
Form C and F:
Ball steel, ball seat high-carbon steel.
Form G and J:
Ball high-carbon steel, ball seat steel.

Version:
Form C and F:
Ball hardened and black oxidised, ball seat phosphated.
Form G and J:
Ball phosphated, ball seat hardened and black oxidised.

Sample order:
K1164.106

Note:
The self-aligning pads serve as stops, rests and thrust pads in fixture construction.
The seating face returns to the start position when the load is removed.

Ball secured against rotation.

Drawing reference:
Form C: male thread, flattened ball, smooth
Form F: male thread, flattened ball, diamond grip
Form G: press fit, flattened ball, smooth
Form J: press fit, flattened ball, diamond grip

Self-aligning pads

self-righting

KIPP Self-aligning pads, self-righting

Order No.	Form	B	D2	D3	H	E	SW1	Ball-Ø	Load rating max. kN (static load only)
K1164.106	C	9	M6	7	13	11,5	10	9	8
K1164.108	C	12	M8	9,5	18	15	13	12	16
K1164.110	C	15	M10	14	25	21,9	19	17	32
K1164.112	C	18	M12	20	36	31,2	27	25	64
K1164.116	C	24	M16	22	40	34,6	30	28	90

Order No.	Form	B	D2	D3	H	E	SW1	Ball-Ø	Load rating max. kN (static load only)
K1164.306	F	9	M6	7	13	11,5	10	9	8
K1164.308	F	12	M8	9,5	18	15	13	12	16
K1164.310	F	15	M10	14	25	21,9	19	17	32
K1164.312	F	18	M12	20	36	31,2	27	25	64
K1164.316	F	24	M16	22	40	34,6	30	28	90

Order No.	Form	D2	D3	H	E	T	SW1	SW2	Ball-Ø	Load rating max. kN (static load only)
K1164.403	G	M3	9	13	11,5	5	10	6	9	8
K1164.404	G	M4	12	18	15	6	13	8	12	16
K1164.405	G	M5	18	25	21,9	8	19	10	17	32
K1164.406	G	M6	26	36	31,2	10	27	16	25	64
K1164.408	G	M8	30	40	34,6	12	30	17	28	90

Order No.	Form	D2	D3	H	E	T	SW1	SW2	Ball-Ø	Load rating max. kN (static load only)
K1164.603	J	M3	9	13	11,5	5	10	6	9	8
K1164.604	J	M4	12	18	15	6	13	8	12	16
K1164.605	J	M5	18	25	21,9	8	19	10	17	32
K1164.606	J	M6	26	36	31,2	10	27	16	25	64
K1164.608	J	M8	30	40	34,6	12	30	17	28	90

Self-aligning pads

self-righting

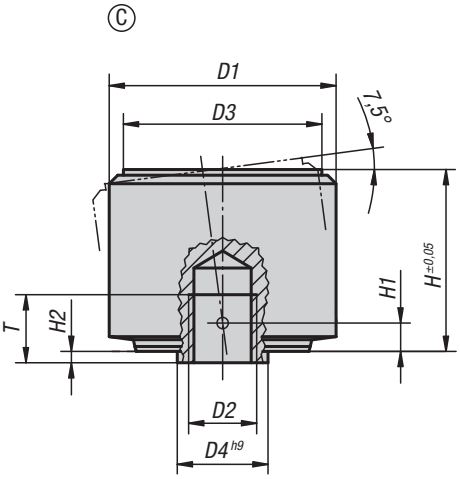

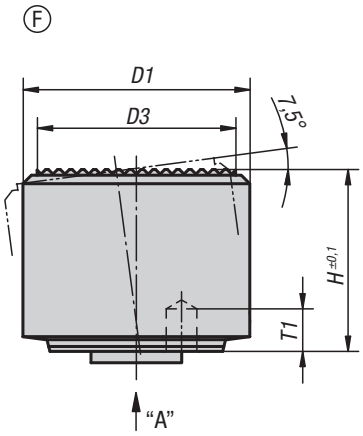

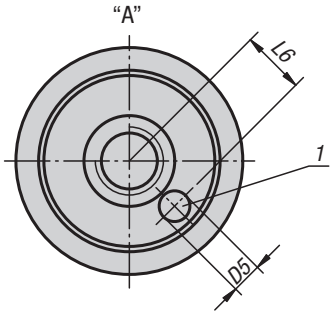

Material:
Carbon steel.

Version:
Hardened, black oxidised.

Sample order:
K0286.105

Note:
Self-aligning pads are used to support and clamp unmachined and machined workpieces.
They also serve as stops, supports and thrust pads in fixtures and toolmaking.

Advantages:
– The built-in O-ring prevents dirt and foreign particles from entering.
– The clamping surface swivels back automatically after clamping.
– High load rating and small size.

Drawing reference:
Form C: smooth face
Form F: serrated face

1) Hole for pin as a rotation lock

1. bring gripper into position

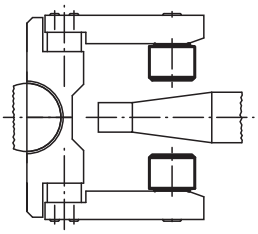

zero-point position of self-aligning pads

2. grip workpiece

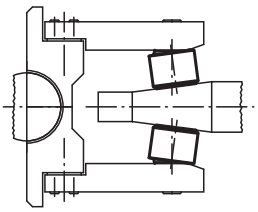

self-aligning pads adapt to workpiece contour

3. open gripper

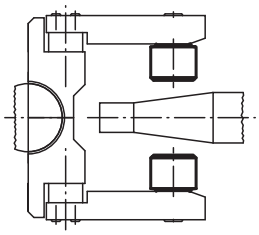

self-aligning pads swivel back automatically

KIPP Self-aligning pads self-righting

Order No.	Form	D1	D2	D3	D4	D5	H	H1	H2	T	T1	L6	Load rating max. kN (static load only)
K0286.105	C	18	M5	15	7	1,8	14	2,1	0,8	5	3	4,6	30
K0286.106	C	22	M6	18	8	2,8	16,5	2,5	1	6	4	5,6	50
K0286.108	C	28	M8	23	11	3,3	21,5	3,4	1,3	8	5	7,5	90
K0286.110	C	34	M10	29	13	4,4	27	4,2	1,6	10	6	9,2	140
K0286.112	C	40	M12	35	16	5,4	32	5	2	12	8	11,3	220
K0286.305	F	18	M5	15	7	1,8	14	2,1	0,8	5	3	4,6	30
K0286.306	F	22	M6	18	8	2,8	16,5	2,5	1	6	4	5,6	50
K0286.308	F	28	M8	23	11	3,3	21,5	3,4	1,3	8	5	7,5	90
K0286.310	F	34	M10	29	13	4,4	27	4,2	1,6	10	6	9,2	140
K0286.312	F	40	M12	35	16	5,4	32	5	2	12	8	11,3	220

Self-aligning pads

with locknut

Ⓒ

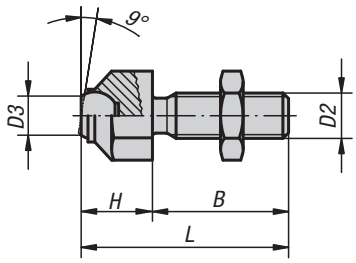

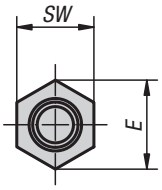

Ⓕ

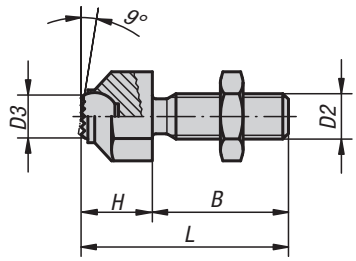

Material:
Steel or stainless steel.

Version:
Steel version:
Housing tempered and manganese phosphated.
Nut black oxidised.

Stainless steel version:
Housing tempered and electropolished.
Nut bright.

Sample order:
K0287.316

Note:
Ball secured against rotation.

KIPP Self-aligning pads adjustable

Order No.	Form	Main material	B	D2	D3	H	L	E	SW	Ball-Ø	Load rating max. kN (static load only)
K0287.308	F	steel	25	M8	5,8	11,6	36,6	14,5	13	8,5	8
K0287.310	F	steel	30	M10	8,6	15,7	45,7	19	17	12	8
K0287.312	F	steel	35	M12	8,6	15,7	50,7	19	17	12	15
K0287.316	F	steel	40	M16	10,5	20,7	60,7	27	24	16	25
K0287.320	F	steel	50	M20	20	27,3	77,3	33	30	25	90
K0287.3081	F	stainless steel	25	M8	5,8	11,6	36,6	14,5	13	8,5	8
K0287.3101	F	stainless steel	30	M10	8,6	15,7	45,7	19	17	12	8
K0287.3121	F	stainless steel	35	M12	8,6	15,7	50,7	19	17	12	15
K0287.3161	F	stainless steel	40	M16	10,5	20,7	60,7	27	24	16	25
K0287.3201	F	stainless steel	50	M20	20	27,3	77,3	33	30	25	90

Self-aligning pads

male thread, with O-ring

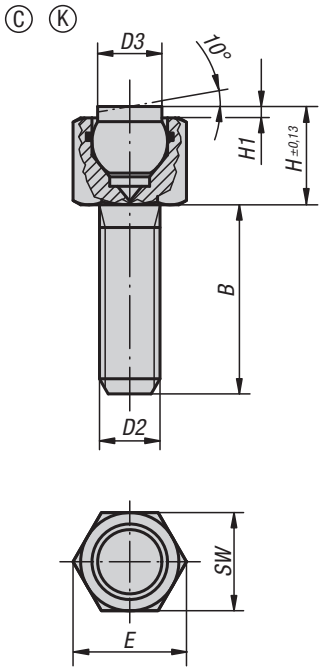

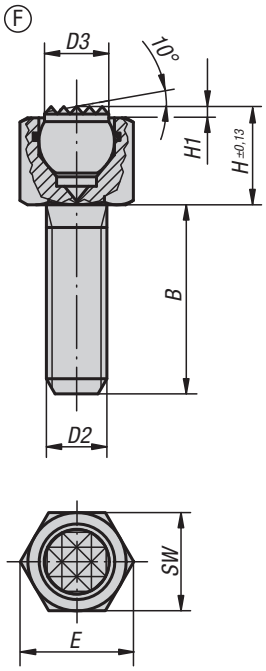

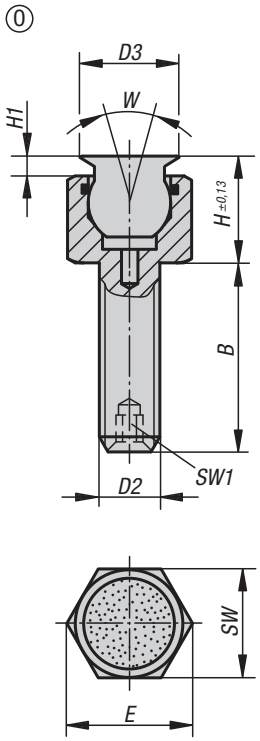

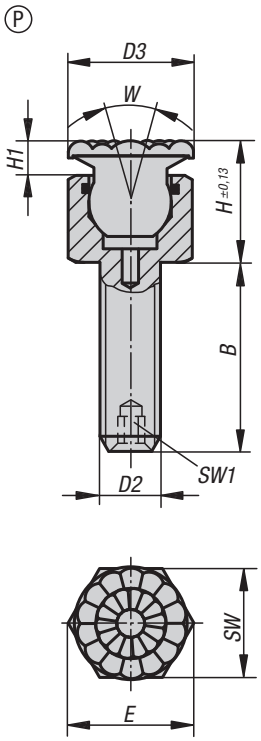

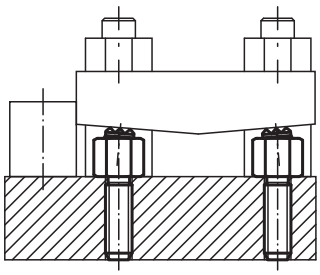

Material:
Body carbon steel.
Ball:
Form C, F, tool steel.
Form K POM.
Form O stainless steel diamond impregnated.
Form P stainless steel with polyurethane surface.

Version:
Body tempered, black oxidised.
Ball:
Form C, F hardened, black oxidised.
Form K POM ball, white.
Form O surface comparable to 100 grade abrasive grit.
Form P polyurethane, hardness 60 Shore.

Sample order:
K0288.506X012
(include length L1)

Note:
Self-aligning pads are used to support and clamp unmachined and machined workpieces. They also serve as stops, supports and thrust pads in fixtures and toolmaking.

Ball secured against rotation.

Form O: The abrasive diamond surface is bonded firmly to the ball. It is ideally suited to supporting smooth or slippery applications with a minimum of clamping pressure. This allows the diamond particles to get a firm grip on a very small area with minimum damage to the surface.
The diamond surface offers excellent wear resistance.

Form P: The polyurethane surface is vulcanised firmly to the ball. It is abrasion-resistant and does not discolour.
It offers optimum protection against damage to delicate surfaces. The pearl-like surface gives a firm grip and allows air to escape so as to prevent any suction effect between the contact surface and the self-aligning pads.

Advantages:
The built-in O-ring holds the ball in place and keeps dirt and foreign particles out, ensuring uniform movement.

Self-aligning pads

male thread, with O-ring

KIPP Form C, flattened steel ball, smooth

Order No.	Form	B	D2	D3	H	H1	E	SW	Ball-Ø	Load rating max. kN (static load only)
K0288.106X012	C	12	M6	6	9,5	1,5	11,5	10	7	9
K0288.106X025	C	25	M6	6	9,5	1,5	11,5	10	7	9
K0288.106X040	C	40	M6	6	9,5	1,5	11,5	10	7	9
K0288.108X012	C	12	M8	8,5	13	1,5	15	13	10	15
K0288.108X025	C	25	M8	8,5	13	1,5	15	13	10	15
K0288.108X040	C	40	M8	8,5	13	1,5	15	13	10	15

KIPP Form F, flattened steel ball, diamond grip

Order No.	Form	B	D2	D3	H	H1	E	SW	Ball-Ø	Load rating max. kN (static load only)
K0288.306X012	F	12	M6	6	9,5	1,5	11,5	10	7	9
K0288.306X025	F	25	M6	6	9,5	1,5	11,5	10	7	9
K0288.306X040	F	40	M6	6	9,5	1,5	11,5	10	7	9
K0288.308X012	F	12	M8	8,5	13	1,5	15	13	10	15
K0288.308X025	F	25	M8	8,5	13	1,5	15	13	10	15
K0288.308X040	F	40	M8	8,5	13	1,5	15	13	10	15

KIPP Form K, flattened POM ball, smooth

Order No.	Form	B	D2	D3	H	H1	E	SW	Ball-Ø	Load rating max. kN (static load only)
K0288.706X012	K	12	M6	6	9,5	1,5	11,5	10	7	2
K0288.706X025	K	25	M6	6	9,5	1,5	11,5	10	7	2
K0288.706X040	K	40	M6	6	9,5	1,5	11,5	10	7	2
K0288.708X012	K	12	M8	8,5	13	1,5	15	13	10	4
K0288.708X025	K	25	M8	8,5	13	1,5	15	13	10	4
K0288.708X040	K	40	M8	8,5	13	1,5	15	13	10	4

KIPP Form O, stainless-steel ball, diamond impregnated

Order No.	Form	B	D2	D3	H	H1	E	SW	SW1	W	Ball-Ø	Load rating max. kN (static load only)
K0288.506X	O	12	M6	8	10	2	11,5	10	-	28	7	9,2
K0288.508X	O	12	M8	11	14,5	3	15	13	-	28	10	15,5
K0288.510X	O	15	M10	14	16	3	19,6	17	3	28	13	18,8
K0288.512X	O	20	M12	19	19	4	21,9	19	5	24	15	29,8
K0288.516X	O	25	M16	21	23	4	27,7	24	6	24	20	50,3

KIPP Form P, stainless-steel ball with polyurethane face

Order No.	Form	B	D2	D3	H	H1	E	SW	SW1	W	Ball-Ø
K0288.606X	P	12	M6	10	12	4	11,5	10	-	28	7
K0288.608X	P	12	M8	13	16,5	5	15	13	-	28	10
K0288.610X	P	15	M10	16	18	5	19,6	17	3	28	13
K0288.612X	P	20	M12	21	21	6	21,9	19	5	24	15
K0288.616X	P	25	M16	23	25	6	27,7	24	6	24	20

Self-aligning pads

adjustable, with O-ring and exchangeable inserts

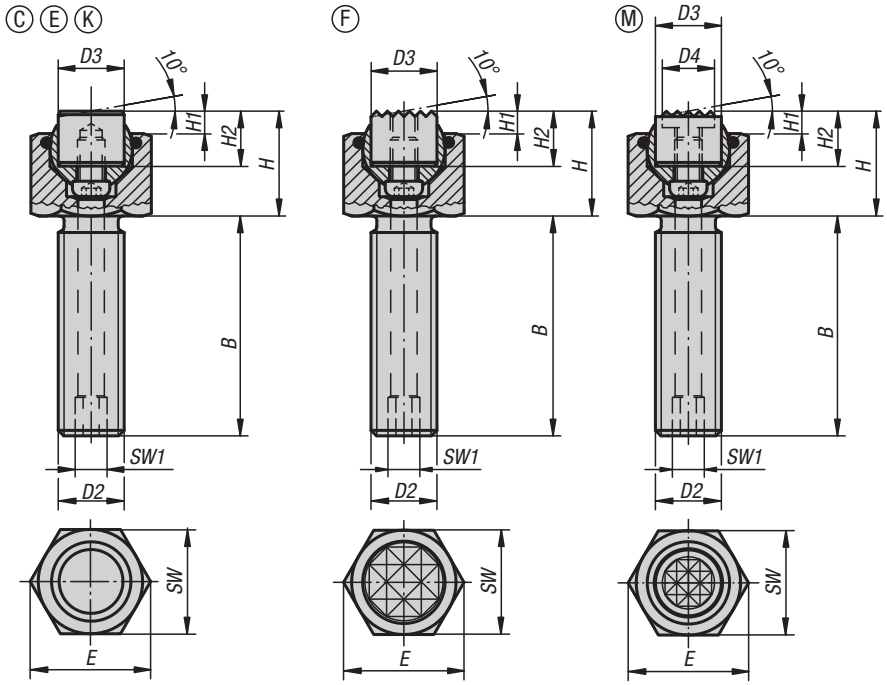

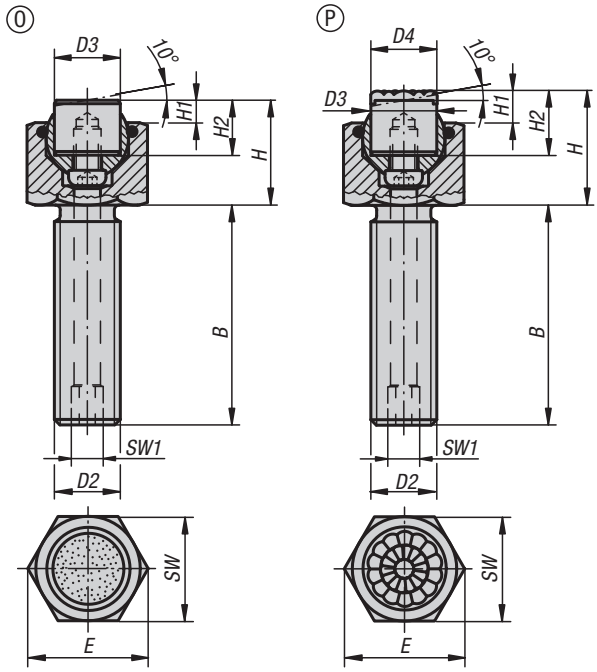

Material:
Body carbon steel.
Ball rust and acid resistant steel.
Inserts:
Form C, F, M tool steel
Form K POM
Form E stainless steel.
Form O stainless steel diamond impregnated.
Form P stainless steel with polyurethane surface.

Version:
Body tempered, black oxidised.
Ball hardened, bright.
Inserts:
Form C, F hardened, black oxidised.
Form M with carbide serrations, black oxidised.
Form K white.
Form E hardened, bright.
Form O diamond impregnated surface comparable to 100 grade abrasive grit.
Form P polyurethane surface, hardness 60 Shore.

Sample order:
K0289.124X100

Note:
Self-aligning pads are used to support and clamp unmachined and machined workpieces.
They also serve as stops, supports and thrust pads in fixtures and toolmaking.
The ball can be removed from the housing by applying light pressure to the socket head screw.

Ball secured against rotation.

Advantages:
Highly cost-effective as inserts can be exchanged.
The built-in O-ring holds the ball in place and keeps dirt and foreign particles out, ensuring uniform movement.

Self-aligning pads

adjustable, with O-ring and exchangeable inserts

Order No.	Form	B	D2	D3	H	H1	H2	E	SW	SW1	Ball-Ø	Load rating max. kN (static load only)	Order No. steel insert
K0289.110X015	C	15	M10	10	17	4	10	19,6	17	3	13	19	K0385.10108
K0289.110X030	C	30	M10	10	17	4	10	19,6	17	3	13	19	K0385.10108
K0289.110X050	C	50	M10	10	17	4	10	19,6	17	3	13	19	K0385.10108
K0289.112X020	C	20	M12	12	19	4	10	21,9	19	5	15	30	K0385.12108
K0289.112X040	C	40	M12	12	19	4	10	21,9	19	5	15	30	K0385.12108
K0289.112X060	C	60	M12	12	19	4	10	21,9	19	5	15	30	K0385.12108
K0289.116X025	C	25	M16	16	23	4	10	27,7	24	6	20	50	K0385.16108
K0289.116X050	C	50	M16	16	23	4	10	27,7	24	6	20	50	K0385.16108
K0289.116X080	C	80	M16	16	23	4	10	27,7	24	6	20	50	K0385.16108
K0289.120X030	C	30	M20	20	24	4	10	34,6	30	8	23	85	K0385.20108
K0289.120X060	C	60	M20	20	24	4	10	34,6	30	8	23	85	K0385.20108
K0289.120X100	C	100	M20	20	24	4	10	34,6	30	8	23	85	K0385.20108
K0289.124X040	C	40	M24	25	30	4	10	41,6	36	10	28	121	K0385.25108
K0289.124X100	C	100	M24	25	30	4	10	41,6	36	10	28	121	K0385.25108

Order No.	Form	B	D2	D3	H	H1	H2	E	SW	SW1	Ball-Ø	Load rating max. kN (static load only)	Order No. stainless steel insert
K0289.210X015	E	15	M10	10	17	4	10	19,6	17	3	13	19	K0385.10102
K0289.210X030	E	30	M10	10	17	4	10	19,6	17	3	13	19	K0385.10102
K0289.210X050	E	50	M10	10	17	4	10	19,6	17	3	13	19	K0385.10102
K0289.212X020	E	20	M12	12	19	4	10	21,9	19	5	15	30	K0385.12102
K0289.212X040	E	40	M12	12	19	4	10	21,9	19	5	15	30	K0385.12102
K0289.212X060	E	60	M12	12	19	4	10	21,9	19	5	15	30	K0385.12102
K0289.216X025	E	25	M16	16	23	4	10	27,7	24	6	20	50	K0385.16102
K0289.216X050	E	50	M16	16	23	4	10	27,7	24	6	20	50	K0385.16102
K0289.216X080	E	80	M16	16	23	4	10	27,7	24	6	20	50	K0385.16102
K0289.220X030	E	30	M20	20	24	4	10	34,6	30	8	23	85	K0385.20102
K0289.220X060	E	60	M20	20	24	4	10	34,6	30	8	23	85	K0385.20102
K0289.220X100	E	100	M20	20	24	4	10	34,6	30	8	23	85	K0385.20102
K0289.224X040	E	40	M24	25	30	4	10	41,6	36	10	28	121	K0385.25102
K0289.224X100	E	100	M24	25	30	4	10	41,6	36	10	28	121	K0385.25102

Order No.	Form	B	D2	D3	H	H1	H2	E	SW	SW1	Ball-Ø	Load rating max. kN (static load only)	Order No. gripper
K0289.310X015	F	15	M10	10	17	4	10	19,6	17	3	13	19	K0385.1010
K0289.310X030	F	30	M10	10	17	4	10	19,6	17	3	13	19	K0385.1010
K0289.310X050	F	50	M10	10	17	4	10	19,6	17	3	13	19	K0385.1010
K0289.312X020	F	20	M12	12	19	4	10	21,9	19	5	15	30	K0385.1210
K0289.312X040	F	40	M12	12	19	4	10	21,9	19	5	15	30	K0385.1210
K0289.312X060	F	60	M12	12	19	4	10	21,9	19	5	15	30	K0385.1210
K0289.316X025	F	25	M16	16	23	4	10	27,7	24	6	20	50	K0385.1610
K0289.316X050	F	50	M16	16	23	4	10	27,7	24	6	20	50	K0385.1610
K0289.316X080	F	80	M16	16	23	4	10	27,7	24	6	20	50	K0385.1610
K0289.320X030	F	30	M20	20	24	4	10	34,6	30	8	23	85	K0385.2010
K0289.320X060	F	60	M20	20	24	4	10	34,6	30	8	23	85	K0385.2010
K0289.320X100	F	100	M20	20	24	4	10	34,6	30	8	23	85	K0385.2010
K0289.324X040	F	40	M24	25	30	4	10	41,6	36	10	28	121	K0385.2510
K0289.324X100	F	100	M24	25	30	4	10	41,6	36	10	28	121	K0385.2510

Self-aligning pads

adjustable, with O-ring and exchangeable inserts

Order No.	Form	B	D2	D3	H	H1	H2	E	SW	SW1	Ball-Ø	Load rating max. kN (static load only)	Order No. POM insert
K0289.710X015	K	15	M10	10	17	4	10	19,6	17	3	13	4	K0385.10109
K0289.710X030	K	30	M10	10	17	4	10	19,6	17	3	13	4	K0385.10109
K0289.710X050	K	50	M10	10	17	4	10	19,6	17	3	13	4	K0385.10109
K0289.712X020	K	20	M12	12	19	4	10	21,9	19	5	15	7	K0385.12109
K0289.712X040	K	40	M12	12	19	4	10	21,9	19	5	15	7	K0385.12109
K0289.712X060	K	60	M12	12	19	4	10	21,9	19	5	15	7	K0385.12109
K0289.716X025	K	25	M16	16	23	4	10	27,7	24	6	20	14	K0385.16109
K0289.716X050	K	50	M16	16	23	4	10	27,7	24	6	20	14	K0385.16109
K0289.716X080	K	80	M16	16	23	4	10	27,7	24	6	20	14	K0385.16109
K0289.720X030	K	30	M20	20	24	4	10	34,6	30	8	23	27	K0385.20109
K0289.720X060	K	60	M20	20	24	4	10	34,6	30	8	23	27	K0385.20109
K0289.720X100	K	100	M20	20	24	4	10	34,6	30	8	23	27	K0385.20109
K0289.724X040	K	40	M24	25	30	4	10	41,6	36	10	28	47	K0385.25109
K0289.724X100	K	100	M24	25	30	4	10	41,6	36	10	28	47	K0385.25109

Order No.	Form	B	D2	D3	D4	H	H1	H2	E	SW	SW1	Ball-Ø	Load rating max. kN (static load only)	Order No. gripper
K0289.910X015	M	15	M10	10	7,9	17	4	10	19,6	17	3	13	19	K0385.10107
K0289.910X030	M	30	M10	10	7,9	17	4	10	19,6	17	3	13	19	K0385.10107
K0289.910X050	M	50	M10	10	7,9	17	4	10	19,6	17	3	13	19	K0385.10107
K0289.912X020	M	20	M12	12	9,5	19	4	10	21,9	19	5	15	30	K0385.12107
K0289.912X040	M	40	M12	12	9,5	19	4	10	21,9	19	5	15	30	K0385.12107
K0289.912X060	M	60	M12	12	9,5	19	4	10	21,9	19	5	15	30	K0385.12107
K0289.916X025	M	25	M16	16	12,7	23	4	10	27,7	24	6	20	50	K0385.16107
K0289.916X050	M	50	M16	16	12,7	23	4	10	27,7	24	6	20	50	K0385.16107
K0289.916X080	M	80	M16	16	12,7	23	4	10	27,7	24	6	20	50	K0385.16107
K0289.920X030	M	30	M20	20	15,9	24	4	10	34,6	30	8	23	85	K0385.20107
K0289.920X060	M	60	M20	20	15,9	24	4	10	34,6	30	8	23	85	K0385.20107
K0289.920X100	M	100	M20	20	15,9	24	4	10	34,6	30	8	23	85	K0385.20107
K0289.924X040	M	40	M24	25	19	30	4	10	41,6	36	10	28	121	K0385.25107
K0289.924X100	M	100	M24	25	19	30	4	10	41,6	36	10	28	121	K0385.25107

Self-aligning pads

adjustable, with O-ring and exchangeable inserts

Order No.	Form	B	D2	D3	H	H1	H2	E	SW	SW1	Ball-Ø	Load rating max. kN (static load only)	Order No. stainless steel insert, diamond surface
K0289.510X015	0	15	M10	10	17	4	10	19,6	17	3	13	19	K0385.10105
K0289.510X030	0	30	M10	10	17	4	10	19,6	17	3	13	19	K0385.10105
K0289.510X050	0	50	M10	10	17	4	10	19,6	17	3	13	19	K0385.10105
K0289.512X020	0	20	M12	12	19	4	10	21,9	19	5	15	30	K0385.12105
K0289.512X040	0	40	M12	12	19	4	10	21,9	19	5	15	30	K0385.12105
K0289.512X060	0	60	M12	12	19	4	10	21,9	19	5	15	30	K0385.12105
K0289.516X025	0	25	M16	16	23	4	10	27,7	24	6	20	50	K0385.16105
K0289.516X050	0	50	M16	16	23	4	10	27,7	24	6	20	50	K0385.16105
K0289.516X080	0	80	M16	16	23	4	10	27,7	24	6	20	50	K0385.16105
K0289.520X030	0	30	M20	20	24	4	10	34,6	30	8	23	85	K0385.20105
K0289.520X060	0	60	M20	20	24	4	10	34,6	30	8	23	85	K0385.20105
K0289.520X100	0	100	M20	20	24	4	10	34,6	30	8	23	85	K0385.20105
K0289.524X040	0	40	M24	25	30	4	10	41,6	36	10	28	121	K0385.25105
K0289.524X100	0	100	M24	25	30	4	10	41,6	36	10	28	121	K0385.25105

Order No.	Form	B	D2	D3	D4	H	H1	H2	E	SW	SW1	Ball-Ø	Order No. stainless steel insert, polyurethane surface
K0289.610X015	P	15	M10	10	10	19	6	12	19,6	17	3	13	K0385.10126
K0289.610X030	P	30	M10	10	10	19	6	12	19,6	17	3	13	K0385.10126
K0289.610X050	P	50	M10	10	10	19	6	12	19,6	17	3	13	K0385.10126
K0289.612X020	P	20	M12	12	13	21	6	12	21,9	19	5	15	K0385.12126
K0289.612X040	P	40	M12	12	13	21	6	12	21,9	19	5	15	K0385.12126
K0289.612X060	P	60	M12	12	13	21	6	12	21,9	19	5	15	K0385.12126
K0289.616X025	P	25	M16	16	16	25	6	12	27,7	24	6	20	K0385.16126
K0289.616X050	P	50	M16	16	16	25	6	12	27,7	24	6	20	K0385.16126
K0289.616X080	P	80	M16	16	16	25	6	12	27,7	24	6	20	K0385.16126
K0289.620X030	P	30	M20	20	21	26	6	12	34,6	30	8	23	K0385.20126
K0289.620X060	P	60	M20	20	21	26	6	12	34,6	30	8	23	K0385.20126
K0289.620X100	P	100	M20	20	21	26	6	12	34,6	30	8	23	K0385.20126
K0289.624X040	P	40	M24	25	27	32	6	12	41,6	36	10	28	K0385.25126
K0289.624X100	P	100	M24	25	27	32	6	12	41,6	36	10	28	K0385.25126

Self-aligning pads

adjustable, with O-ring and hexagon socket

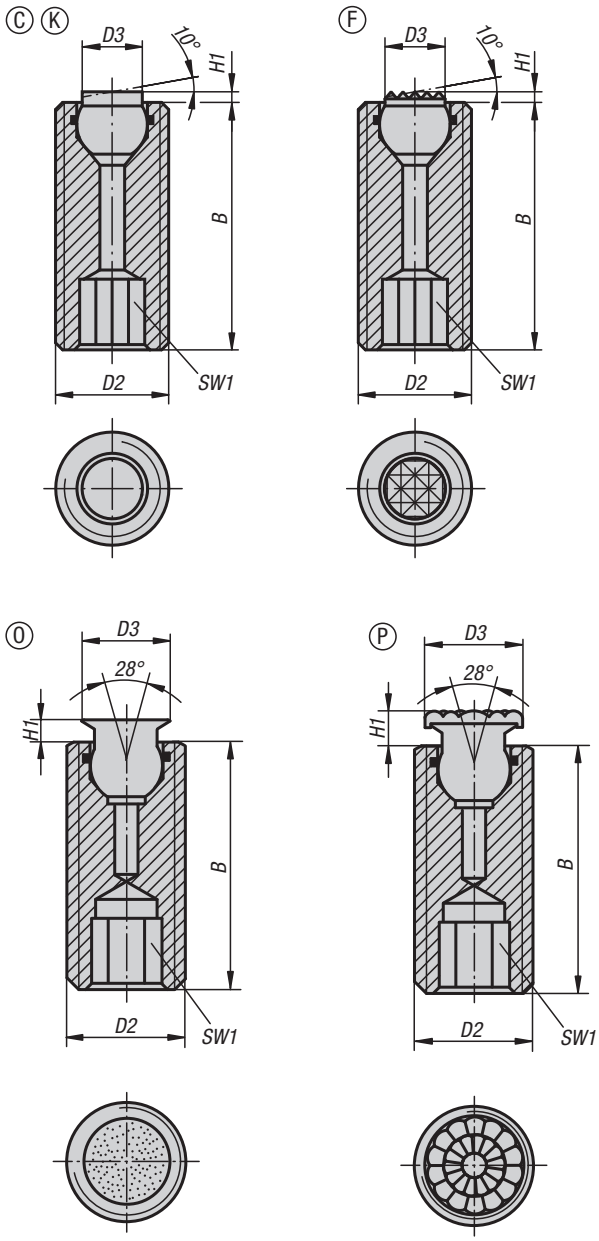

Material:
Body carbon steel.
Ball:
Form C, F, tool steel.
Form K POM.
Form O stainless steel diamond impregnated.
Form P stainless steel with polyurethane surface.

Version:
Body tempered, black oxidised.
Ball:
Form C, F hardened, black oxidised.
Form K POM ball, white.
Form O surface comparable to 100 grade abrasive grit.
Form P polyurethane, hardness 60 Shore.

Sample order:
K0290.510X026
(include length L)

Note:
Self-aligning pads are used to support and clamp unmachined and machined workpieces.
They also serve as stops, supports and thrust pads in fixtures and toolmaking.

Ball secured against rotation.

Form O: The abrasive diamond surface is bonded firmly to the ball. It is ideally suited to supporting smooth or slippery applications with a minimum of clamping pressure. This allows the diamond particles to get a firm grip on a very small area with minimum damage to the surface.
The diamond surface offers excellent wear resistance.

Form P: The polyurethane surface is vulcanised firmly to the ball. It is abrasion-resistant and does not discolour. Offers optimum protection against damage to delicate surfaces. The pearl-like surface gives a firm grip and allows air to escape so as to prevent any suction effect between the contact surface and the toggle locator.

Advantages:
The built-in O-ring holds the ball in place and keeps dirt and foreign particles out, ensuring uniform movement.
The hexagon socket allows easy adjustment and positioning in through holes.

Self-aligning pads

adjustable, with O-ring and hexagon socket

KIPP Form C, flattened steel ball, smooth

Order No.	Form	B	D2	D3	H1	SW1	Ball-Ø	Load rating max. kN (static load only)
K0290.112X025	C	25	M12	6	1,5	6	7	15
K0290.112X035	C	35	M12	6	1,5	6	7	15
K0290.112X050	C	50	M12	6	1,5	6	7	15
K0290.116X025	C	25	M16	8,5	1,5	8	10	23
K0290.116X035	C	35	M16	8,5	1,5	8	10	23
K0290.116X050	C	50	M16	8,5	1,5	8	10	23

KIPP Form F, flattened steel ball, diamond grip

Order No.	Form	B	D2	D3	H1	SW1	Ball-Ø	Load rating max. kN (static load only)
K0290.312X025	F	25	M12	6	1,5	6	7	15
K0290.312X035	F	35	M12	6	1,5	6	7	15
K0290.312X050	F	50	M12	6	1,5	6	7	15
K0290.316X025	F	25	M16	8,5	1,5	8	10	23
K0290.316X035	F	35	M16	8,5	1,5	8	10	23
K0290.316X050	F	50	M16	8,5	1,5	8	10	23

KIPP Form K, flattened POM ball, smooth

Order No.	Form	B	D2	D3	H1	SW1	Ball-Ø	Load rating max. kN (static load only)
K0290.712X025	K	25	M12	6	1,5	6	7	2
K0290.712X035	K	35	M12	6	1,5	6	7	2
K0290.712X050	K	50	M12	6	1,5	6	7	2
K0290.716X025	K	25	M16	8,5	1,5	8	10	4
K0290.716X035	K	35	M16	8,5	1,5	8	10	4
K0290.716X050	K	50	M16	8,5	1,5	8	10	4

KIPP Form O, stainless-steel ball, diamond impregnated

Order No.	Form	B	D2	D3	H1	SW1	Ball-Ø	Load rating max. kN (static load only)
K0290.510X	O	25	M10	6	1,5	5	5	-
K0290.512X	O	25	M12	8	2	6	7	15,4
K0290.516X	O	25	M16	11	3	8	10	23,3
K0290.520X	O	30	M20	14	3	10	13	37,7

KIPP Form P, stainless-steel ball with polyurethane face

Order No.	Form	B	D2	D3	H1	SW1	Ball-Ø
K0290.610X	P	25	M10	8	3,5	5	5
K0290.612X	P	25	M12	10	4	6	7
K0290.616X	P	25	M16	13	5	8	10
K0290.620X	P	30	M20	16	5	10	13

Self-aligning pads

adjustable, with O-ring, exchangeable inserts and hexagon socket

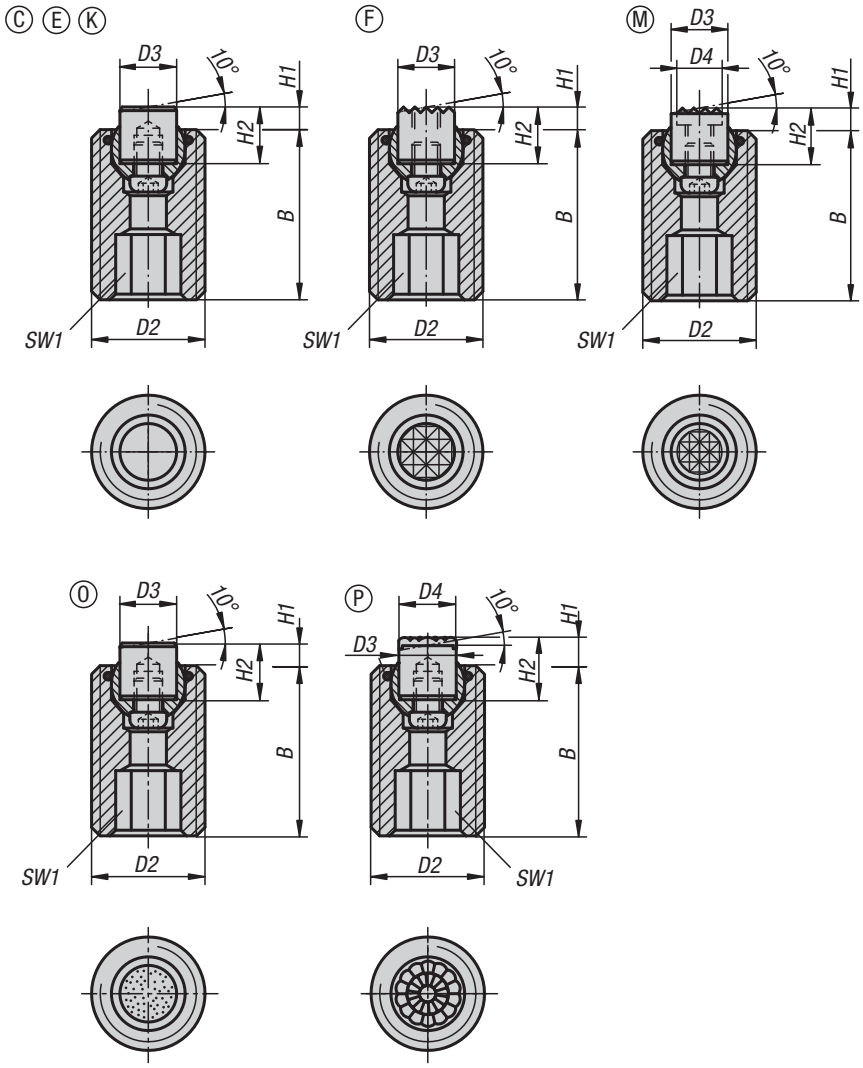

Material:
Body carbon steel.
Ball rust and acid resistant steel.
Inserts:
Form C, F, M tool steel
Form K POM
Form E stainless steel.
Form O stainless steel diamond impregnated.
Form P stainless steel with polyurethane surface.

Version:
Body tempered, black oxidised.
Ball hardened, bright.
Inserts:
Form C, F hardened, black oxidised.
Form M with carbide serrations, black oxidised.
Form K white.
Form E hardened, bright.
Form O diamond impregnated surface comparable to 100 grade abrasive grit.
Form P polyurethane surface, hardness 60 Shore.

Sample order:
K0291.720X070

Note:
Self-aligning pads are used to support and clamp unmachined and machined workpieces.
They also serve as stops, supports and thrust pads in fixtures and toolmaking.
The ball can be removed from the housing by applying light pressure to the socket head screw.

Ball secured against rotation.

Advantages:
Highly cost-effective as inserts can be exchanged.
The built-in O-ring holds the ball in place and keeps dirt and foreign particles out, ensuring uniform movement.

KIPP Form C, flattened steel insert, smooth

Order No.	Form	B	D2	D3	H1	H2	SW1	Ball-Ø	Load rating max. kN (static load only)	Order No. steel insert
K0291.120X030	C	30	M20	10	4	10	10	13	37	K0385.10108
K0291.120X050	C	50	M20	10	4	10	10	13	37	K0385.10108
K0291.120X070	C	70	M20	10	4	10	10	13	37	K0385.10108
K0291.124X040	C	40	M24	12	4	10	10	15	55	K0385.12108
K0291.124X080	C	80	M24	12	4	10	10	15	55	K0385.12108

KIPP Form E, flattened stainless steel insert, smooth

Order No.	Form	B	D2	D3	H1	H2	SW1	Ball-Ø	Load rating max. kN (static load only)	Order No. stainless steel insert
K0291.220X030	E	30	M20	10	4	10	10	13	37	K0385.10102
K0291.220X050	E	50	M20	10	4	10	10	13	37	K0385.10102
K0291.220X070	E	70	M20	10	4	10	10	13	37	K0385.10102
K0291.224X040	E	40	M24	12	4	10	10	15	55	K0385.12102
K0291.224X080	E	80	M24	12	4	10	10	15	55	K0385.12102

KIPP Form F, flattened, diamond grip

Order No.	Form	B	D2	D3	H1	H2	SW1	Ball-Ø	Load rating max. kN (static load only)	Order No. gripper
K0291.320X030	F	30	M20	10	4	10	10	13	37	K0385.1010
K0291.320X050	F	50	M20	10	4	10	10	13	37	K0385.1010
K0291.320X070	F	70	M20	10	4	10	10	13	37	K0385.1010
K0291.324X040	F	40	M24	12	4	10	10	15	55	K0385.1210
K0291.324X080	F	80	M24	12	4	10	10	15	55	K0385.1210

KIPP Form K, flattened POM insert, smooth

Order No.	Form	B	D2	D3	H1	H2	SW1	Ball-Ø	Load rating max. kN (static load only)	Order No. POM insert
K0291.720X030	K	30	M20	10	4	10	10	13	4	K0385.10109
K0291.720X050	K	50	M20	10	4	10	10	13	4	K0385.10109
K0291.720X070	K	70	M20	10	4	10	10	13	4	K0385.10109
K0291.724X040	K	40	M24	12	4	10	10	15	7	K0385.12109
K0291.724X080	K	80	M24	12	4	10	10	15	7	K0385.12109

KIPP Form M, flattened, with carbide serrations

Order No.	Form	B	D2	D3	D4	H1	H2	SW1	Ball-Ø	Load rating max. kN (static load only)	Order No. gripper
K0291.920X030	M	30	M20	10	7,9	4	10	10	13	37	K0385.10107
K0291.920X050	M	50	M20	10	7,9	4	10	10	13	37	K0385.10107
K0291.920X070	M	70	M20	10	7,9	4	10	10	13	37	K0385.10107
K0291.924X040	M	40	M24	12	9,5	4	10	10	15	55	K0385.12107
K0291.924X080	M	80	M24	12	9,5	4	10	10	15	55	K0385.12107

KIPP Form O, stainless-steel insert, diamond impregnated

Order No.	Form	B	D2	D3	H1	H2	SW1	Ball-Ø	Load rating max. kN (static load only)	Order No. stainless steel insert, diamond surface
K0291.520X030	O	30	M20	10	4	10	10	13	37	K0385.10105
K0291.520X050	O	50	M20	10	4	10	10	13	37	K0385.10105
K0291.520X070	O	70	M20	10	4	10	10	13	37	K0385.10105
K0291.524X040	O	40	M24	12	4	10	10	15	55	K0385.12105
K0291.524X080	O	80	M24	12	4	10	10	15	55	K0385.12105

KIPP Form P, stainless-steel insert with polyurethane face

Order No.	Form	B	D2	D3	D4	H1	H2	SW1	Ball-Ø	Load rating max. kN (static load only)	Order No. stainless steel insert, polyurethane surface
K0291.620X030	P	30	M20	10	10	6	12	10	13	37	K0385.10126
K0291.620X050	P	50	M20	10	10	6	12	10	13	37	K0385.10126
K0291.620X070	P	70	M20	10	10	6	12	10	13	37	K0385.10126
K0291.624X040	P	40	M24	12	13	6	12	10	15	55	K0385.12126
K0291.624X080	P	80	M24	12	13	6	12	10	15	55	K0385.12126

Ball-end thrust screws with head

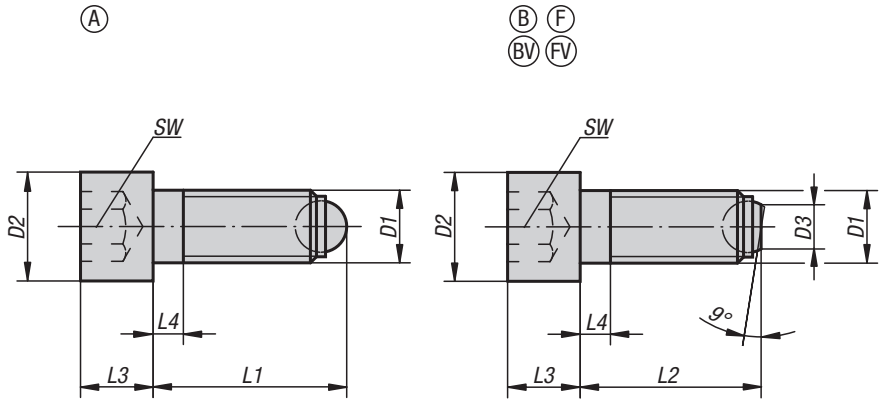

Drawing reference:
Form A: full ball
Form B: flattened ball
Form BV: flattened ball, rotation lock
Form F: serrated flattened ball
Form FV: serrated flattened ball, rotation lock

Material:
Screw carbon steel.
Ball ball-bearing steel.

Version:
Screw grade min. 10.9, black.
Ball hardened, bright.

Sample order:
K0380.10820

Note:
Form A with full ball is used when a clean, polished contact surface is required. Surfaces which are not flat and parallel can be firmly clamped or supported with Form B with flattened ball, the movable ball can adapt itself up to 9°.

KIPP Ball-end thrust screws with head

Order No.	Form	D1	D2	L1	L3	L4	Ball Ø	SW	Load rating max. kN (static load only)
K0380.10410	A	M4	7	9,9	4	2,1	2,5	3	3,5
K0380.10416	A	M4	7	15,9	4	2,1	2,5	3	3,5
K0380.10420	A	M4	7	19,9	4	2,1	2,5	3	3,5
K0380.10512	A	M5	8,5	12,1	5	2,4	3	4	4,5
K0380.10516	A	M5	8,5	16,1	5	2,4	3	4	4,5
K0380.10520	A	M5	8,5	20,1	5	2,4	3	4	4,5
K0380.10620	A	M6	10	20,8	6	3	4	5	9
K0380.10630	A	M6	10	30,8	6	3	4	5	9
K0380.10640	A	M6	10	40,8	6	16	4	5	9
K0380.10820	A	M8	13	21,2	8	3,5	5,5	6	15
K0380.10835	A	M8	13	36,2	8	3,5	5,5	6	15
K0380.10850	A	M8	13	51,2	8	22	5,5	6	15
K0380.11025	A	M10	16	26,7	10	4,5	7	8	20
K0380.11040	A	M10	16	41,7	10	4,5	7	8	20
K0380.11060	A	M10	16	61,7	10	28	7	8	20
K0380.11230	A	M12	18	32	12	5	8,5	10	30
K0380.11250	A	M12	18	52	12	5	8,5	10	30
K0380.11280	A	M12	18	82	12	44	8,5	10	30
K0380.11640	A	M16	24	43,3	16	6	12	14	60
K0380.11660	A	M16	24	63,3	16	6	12	14	60
K0380.11680	A	M16	24	83,3	16	36	12	14	60
K0380.120100	A	M20	30	104,2	20	48	15	17	90
K0380.12050	A	M20	30	54,2	20	7,5	15	17	90
K0380.12080	A	M20	30	84,2	20	28	15	17	90
K0380.124120	A	M24	36	124,7	24	60	18	19	120
K0380.12460	A	M24	36	64,7	24	9	18	19	120
K0380.12490	A	M24	36	94,7	24	30	18	19	120

Ball-end thrust screws with head

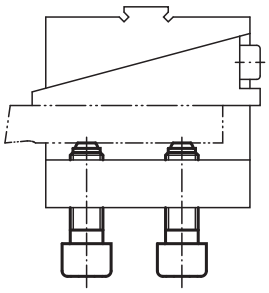

Order No. Form B	Order No. Form F	D1	D2	D3	L2	L3	L4	Ball Ø	SW	Load rating max. kN (static load only)
K0380.20410	-	M4	7	1,4	11,7	4	2,1	2,5	3	3,5
K0380.20416	-	M4	7	1,4	15,7	4	2,1	2,5	3	3,5
K0380.20420	-	M4	7	1,4	19,7	4	2,1	2,5	3	3,5
K0380.20512	-	M5	8,5	2	11,7	5	2,4	3	4	4,5
K0380.20516	-	M5	8,5	2	15,7	5	2,4	3	4	4,5
K0380.20520	-	M5	8,5	2	19,7	5	2,4	3	4	4,5
K0380.20620	-	M6	10	3,2	20	6	3	4	5	9
K0380.20630	-	M6	10	3,2	30	6	3	4	5	9
K0380.20640	-	M6	10	3,2	40	6	16	4	5	9
K0380.20820	-	M8	13	4,5	20	8	3,5	5,5	6	15
K0380.20835	-	M8	13	4,5	35	8	3,5	5,5	6	15
K0380.20850	-	M8	13	4,5	50	8	22	5,5	6	15
K0380.21025	K0380.31025	M10	16	6	25	10	4,5	7	8	20
K0380.21040	K0380.31040	M10	16	6	40	10	4,5	7	8	20
K0380.21060	K0380.31060	M10	16	6	60	10	28	7	8	20
K0380.21230	K0380.31230	M12	18	7,2	30	12	5	8,5	10	30
K0380.21250	K0380.31250	M12	18	7,2	50	12	5	8,5	10	30
K0380.21280	K0380.31280	M12	18	7,2	80	12	44	8,5	10	30
K0380.21640	K0380.31640	M16	24	10,7	40	16	6	12	14	60
K0380.21660	K0380.31660	M16	24	10,7	60	16	6	12	14	60
K0380.21680	K0380.31680	M16	24	10,7	80	16	36	12	14	60
K0380.220100	-	M20	30	13,5	100	20	48	15	17	90
K0380.22050	-	M20	30	13,5	50	20	7,5	15	17	90
K0380.22080	-	M20	30	13,5	80	20	28	15	17	90
K0380.224120	-	M24	36	15,8	120	24	60	18	19	120
K0380.22460	-	M24	36	15,8	60	24	9	18	19	120
K0380.22490	-	M24	36	15,8	90	24	30	18	19	120

Order No. Form BV	Order No. Form FV	D1	D2	D3	L2	L3	L4	Ball Ø	SW	Load rating max. kN (static load only)
K0380.40820	-	M8	13	4,5	20	8	3,5	5,5	6	9
K0380.40835	-	M8	13	4,5	35	8	3,5	5,5	6	9
K0380.40850	-	M8	13	4,5	50	8	22	5,5	6	9
K0380.41025	K0380.51025	M10	16	6	25	10	4,5	7	8	12
K0380.41040	K0380.51040	M10	16	6	40	10	4,5	7	8	12
K0380.41060	K0380.51060	M10	16	6	60	10	28	7	8	12
K0380.41230	K0380.51230	M12	18	7,2	30	12	5	8,5	10	18
K0380.41250	K0380.51250	M12	18	7,2	50	12	5	8,5	10	18
K0380.41280	K0380.51280	M12	18	7,2	80	12	44	8,5	10	18
K0380.41640	K0380.51640	M16	24	10,7	40	16	6	12	14	36
K0380.41660	K0380.51660	M16	24	10,7	60	16	6	12	14	36
K0380.41680	K0380.51680	M16	24	10,7	80	16	36	12	14	36

Ball-end thrust screws with head

stainless steel

Ⓐ

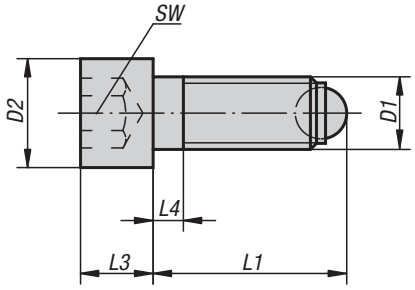

Material:
Stainless steel

Version:
Bright.

Sample order:
K0381.11230

Note:
Form A with full ball is used when a clean, polished contact surface is required. Surfaces which are not flat and parallel can be firmly clamped or supported with Form B with flattened ball, the movable ball can adapt itself up to 9°.

Drawing reference:
Form A: with full ball
Form B: with flattened ball

Ⓑ

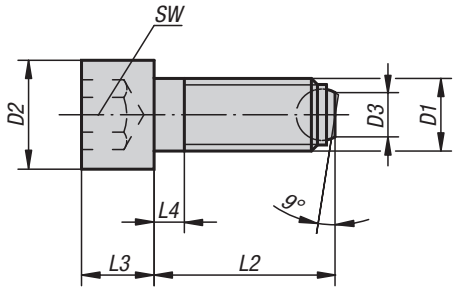

KIPP Ball-end thrust screws with head, stainless steel

Order No. Form A	Order No. Form B	D1	D2	D3	L1	L2	L3	L4	Ball Ø	SW
K0381.10410	K0381.20410	M4	7	-/1,4	9,9/-	-/9,7	4	2,1	2,5	3
K0381.10416	K0381.20416	M4	7	-/1,4	15,9/-	-/15,7	4	2,1	2,5	3
K0381.10420	K0381.20420	M4	7	-/1,4	19,9/-	-/19,7	4	2,1	2,5	3
K0381.10512	K0381.20512	M5	8,5	-/2	12,1/-	-/11,7	5	2,4	3	4
K0381.10516	K0381.20516	M5	8,5	-/2	16,1/-	-/15,7	5	2,4	3	4
K0381.10520	K0381.20520	M5	8,5	-/2	20,1/-	-/19,7	5	2,4	3	4
K0381.10620	K0381.20620	M6	10	-/3,2	20,8/-	-/20	6	3	4	5
K0381.10630	K0381.20630	M6	10	-/3,2	30,8/-	-/30	6	3	4	5
K0381.10640	K0381.20640	M6	10	-/3,2	40,8/-	-/40	6	16	4	5
K0381.10820	K0381.20820	M8	13	-/4,5	21,2/-	-/20	8	3,5	5,5	6
K0381.10835	K0381.20835	M8	13	-/4,5	36,2/-	-/35	8	3,5	5,5	6
K0381.10850	K0381.20850	M8	13	-/4,5	51,2/-	-/50	8	22	5,5	6
K0381.11025	K0381.21025	M10	16	-/6	26,7/-	-/25	10	4,5	7	8
K0381.11040	K0381.21040	M10	16	-/6	41,7/-	-/40	10	4,5	7	8
K0381.11060	K0381.21060	M10	16	-/6	61,7/-	-/60	10	28	7	8
K0381.11230	K0381.21230	M12	18	-/7,2	32/-	-/30	12	5	8,5	10
K0381.11250	K0381.21250	M12	18	-/7,2	52/-	-/50	12	5	8,5	10
K0381.11280	K0381.21280	M12	18	-/7,2	82/-	-/80	12	44	8,5	10
K0381.11640	K0381.21640	M16	24	-/10,7	43,3/-	-/40	16	6	12	14
K0381.11660	K0381.21660	M16	24	-/10,7	63,3/-	-/60	16	6	12	14
K0381.11680	K0381.21680	M16	24	-/10,7	83,3/-	-/80	16	36	12	14

Ball-end thrust screws without head

with fine thread

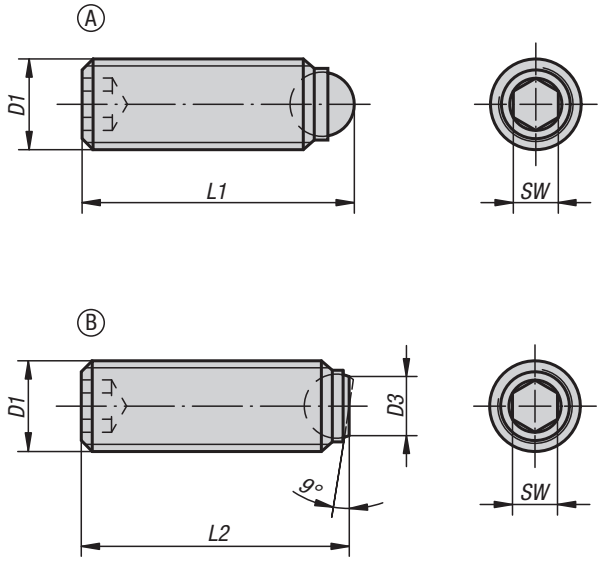

Material:
Screw high-carbon steel, grade 10.9.
Ball, ball-bearing steel.

Version:
Screw black.
Ball hardened and bright.

Sample order:
K0382.11025

Note:
Form A with full ball is used when a clean, polished pressure surface is required. Surfaces which are not plane and parallel can be firmly clamped or supported with Form B with flattened ball because the movable ball can adapt itself up to 9°.

Fine thread enables extremely sensitive alignment of the ball-end thrust screws.

Drawing reference:
Form A: with full ball
Form B: with flattened ball

KIPP Ball-end thrust screws without head with fine thread

Order No. Form A	Order No. Form B	D1	D3	L1	L2	Ball Ø	SW	Load rating max. kN (static load only)
K0382.10810	**K0382.20810**	M8x1	-/4,1	11,2/-	-/10,3	5,5	4	10
K0382.10820	**K0382.20820**	M8x1	-/4,1	21,2/-	-/20,3	5,5	4	15
K0382.11012	**K0382.21012**	M10x1	-/5,6	13,7/-	-/12,3	7	5	20
K0382.11025	**K0382.21025**	M10x1	-/5,6	26,7/-	-/25,3	7	5	20
K0382.11216	**K0382.21216**	M12x1,5	-/7	18/-	-/16,2	8,5	6	30
K0382.11230	**K0382.21230**	M12x1,5	-/7	32/-	-/30,2	8,5	6	30
K0382.11620	**K0382.21620**	M16x1,5	-/10,7	23,3/-	-/20	12	8	60
K0382.11635	**K0382.21635**	M16x1,5	-/10,7	38,3/-	-/35	12	8	60
K0382.12030	**K0382.22030**	M20x1,5	-/13,5	34,2/-	-/30	15	10	90
K0382.12040	**K0382.22040**	M20x1,5	-/13,5	44,2/-	-/40	15	10	90

Ball-end thrust screws without head

with full ball

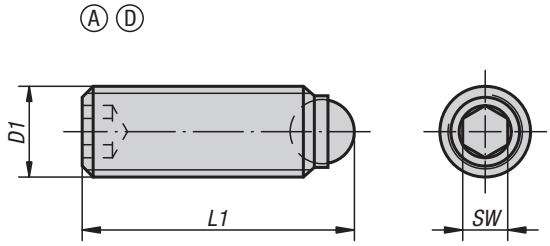

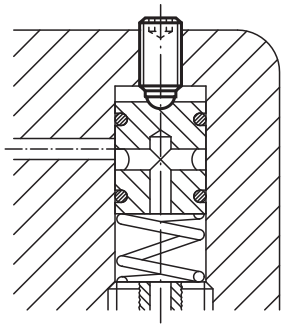

Material:
Screw, high-carbon steel, grade 10.9
Ball, ball-bearing steel or POM.

Version:
Screw black.
Ball hardened bright or POM.

Sample order:
K0383.10810

Note:
Ball-end thrust screws with full ball are used when a clean, polished contact surface is required.
Longer versions have been specially designed to be glued in, allowing mechanical connecting elements with external thread to be made cost-effectively for small and medium-sized series.

Drawing reference:
Form A: steel ball
Form D: POM ball

KIPP Ball-end thrust screws without head with full ball

Order No. Form A	Order No. Form D	D1	L1	Ball Ø	SW	Load rating max. kN (static load only)
K0383.1046	K0383.3046	M4	6	2,5	2	3,5/0,3
K0383.1048	K0383.3048	M4	8	2,5	2	3,5/0,3
K0383.10410	K0383.30410	M4	10	2,5	2	3,5/0,3
K0383.10412	K0383.30412	M4	12	2,5	2	3,5/0,3
K0383.10416	K0383.30416	M4	16	2,5	2	3,5/0,3
K0383.1058	K0383.3058	M5	8	3	2,5	4,5/0,5
K0383.10510	K0383.30510	M5	10	3	2,5	4,5/0,5
K0383.10512	K0383.30512	M5	12	3	2,5	4,5/0,5
K0383.10516	K0383.30516	M5	16	3	2,5	4,5/0,5
K0383.10520	K0383.30520	M5	20	3	2,5	4,5/0,5
K0383.10525	K0383.30525	M5	25	3	2,5	4,5/0,5
K0383.10610	K0383.30610	M6	10,8	4	3	9/0,9
K0383.10612	K0383.30612	M6	12,8	4	3	9/0,9
K0383.10616	K0383.30616	M6	16,8	4	3	9/0,9
K0383.10620	K0383.30620	M6	20,8	4	3	9/0,9
K0383.10625	K0383.30625	M6	25,8	4	3	9/0,9
K0383.10650	-	M6	50,8	4	3	9
K0383.10660	-	M6	60,8	4	3	9
K0383.10680	-	M6	80,8	4	3	9

Ball-end thrust screws without head

with full ball

KIPP Ball-end thrust screws without head with full ball

Order No. Form A	Order No. Form D	D1	L1	Ball Ø	SW	Load rating max. kN (static load only)
K0383.10810	**K0383.30810**	M8	11,2	5,5	4	10/1,5
K0383.10812	**K0383.30812**	M8	13,2	5,5	4	10/1,5
K0383.10816	**K0383.30816**	M8	17,2	5,5	4	15/1,5
K0383.10820	**K0383.30820**	M8	21,2	5,5	4	15/1,5
K0383.10825	**K0383.30825**	M8	26,2	5,5	4	15/1,5
K0383.10830	**K0383.30830**	M8	31,2	5,5	4	15/1,5
K0383.10850	**-**	M8	51,2	5,5	4	15
K0383.10860	**-**	M8	61,2	5,5	4	15
K0383.10880	**-**	M8	81,2	5,5	4	15
K0383.11012	**K0383.31012**	M10	13,7	7	5	20/2
K0383.11016	**K0383.31016**	M10	17,7	7	5	20/2
K0383.11020	**K0383.31020**	M10	21,7	7	5	20/2
K0383.11025	**K0383.31025**	M10	26,7	7	5	20/2
K0383.11035	**K0383.31035**	M10	36,7	7	5	20/2
K0383.11216	**K0383.31216**	M12	18	8,5	6	30/3
K0383.11220	**K0383.31220**	M12	22	8,5	6	30/3
K0383.11225	**-**	M12	27	8,5	6	30
K0383.11230	**K0383.31230**	M12	32	8,5	6	30/3
K0383.11232	**-**	M12	34	8,5	6	30
K0383.11240	**K0383.31240**	M12	42	8,5	6	30/3
K0383.11620	**-**	M16	23,3	12	8	60
K0383.11625	**-**	M16	28,3	12	8	60
K0383.11635	**-**	M16	38,3	12	8	60
K0383.11650	**-**	M16	53,3	12	8	60
K0383.12030	**-**	M20	34,2	15	10	90
K0383.12040	**-**	M20	44,2	15	10	90
K0383.12060	**-**	M20	64,2	15	10	90
K0383.12435	**-**	M24	39,7	18	12	120
K0383.12450	**-**	M24	54,7	18	12	120
K0383.12480	**-**	M24	84,7	18	12	120

Ball-end thrust screws without head

stainless steel with full ball

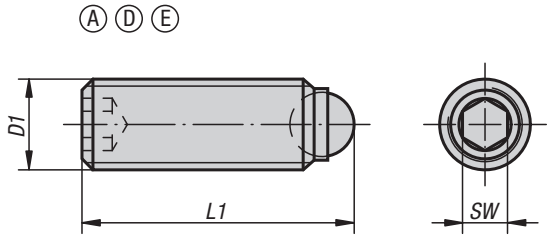

Material:
Screw stainless steel.
Ball stainless steel, POM or ceramic Si_3N_4.

Version:
Stainless steel bright.

Sample order:
K0384.1046

Note:
Ball-end thrust screws with full ball are used when a clean, polished contact surface is required. Longer versions have been designed especially to be glued in, allowing mechanical connecting elements with external threads to be made cost-effectively for small and medium-sized runs. Silicon nitride (Si_3N_4) is characterised by a combination of excellent properties, these include high resilience and strength, excellent wear resistance and good chemical resistance.

Drawing reference:
Form A: stainless steel ball
Form D: POM ball
Form E: ceramic ball

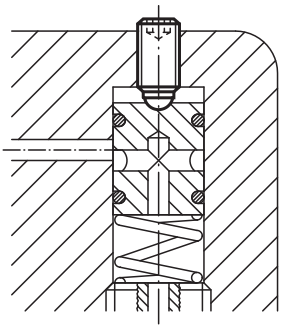

Ball-end thrust screws without head

stainless steel with full ball

KIPP Ball-end thrust screws without head, stainless steel, with full ball

Order No. Form A	Order No. Form D	Order No. Form E	D1	L1	Ball Ø	SW	Load rating max. kN (static load only)
K0384.1046	K0384.3046	-	M4	6	2,5	2	-/0,3
K0384.1048	K0384.3048	-	M4	8	2,5	2	-/0,3
K0384.10410	K0384.30410	-	M4	10	2,5	2	-/0,3
K0384.10412	K0384.30412	-	M4	12	2,5	2	-/0,3
K0384.10416	K0384.30416	-	M4	16	2,5	2	-/0,3
K0384.1058	K0384.3058	K0384.8058	M5	8	3	2,5	-/0,5/4,5
K0384.10510	K0384.30510	-	M5	10	3	2,5	-/0,5
K0384.10512	K0384.30512	K0384.80512	M5	12	3	2,5	-/0,5/4,5
K0384.10516	K0384.30516	-	M5	16	3	2,5	-/0,5
K0384.10520	K0384.30520	K0384.80520	M5	20	3	2,5	-/0,5/4,5
K0384.10525	K0384.30525	-	M5	25	3	2,5	-/0,5
K0384.10610	K0384.30610	K0384.80610	M6	10,8	4	3	-/0,9/9
K0384.10612	K0384.30612	-	M6	12,8	4	3	-/0,9
K0384.10616	K0384.30616	K0384.80616	M6	16,8	4	3	-/0,9/9
K0384.10620	K0384.30620	K0384.80620	M6	20,8	4	3	-/0,9/9
K0384.10625	K0384.30625	K0384.80625	M6	25,8	4	3	-/0,9/9
K0384.10650	-	-	M6	50,8	4	3	-
K0384.10660	-	-	M6	60,8	4	3	-
K0384.10680	-	-	M6	80,8	4	3	-
K0384.10810	K0384.30810	K0384.80810	M8	11,2	5,5	4	-/1,5/10
K0384.10812	K0384.30812	K0384.80812	M8	13,2	5,5	4	-/1,5/10
K0384.10816	K0384.30816	-	M8	17,2	5,5	4	-/1,5
K0384.10820	K0384.30820	K0384.80820	M8	21,2	5,5	4	-/1,5/15
K0384.10825	K0384.30825	K0384.80825	M8	26,2	5,5	4	-/1,5/15
K0384.10830	K0384.30830	K0384.80830	M8	31,2	5,5	4	-/1,5/15
K0384.10850	-	-	M8	51,2	5,5	4	-
K0384.10860	-	-	M8	61,2	5,5	4	-
K0384.10880	-	-	M8	81,2	5,5	4	-
K0384.11012	-	K0384.81012	M10	13,7	7	5	-/20
K0384.11016	-	K0384.81016	M10	17,7	7	5	-/20
K0384.11020	-	K0384.81020	M10	21,7	7	5	-/20
K0384.11025	-	K0384.81025	M10	26,7	7	5	-/20
K0384.11035	-	K0384.81035	M10	36,7	7	5	-/20
K0384.11216	-	K0384.81216	M12	18	8,5	6	-/30
K0384.11220	-	K0384.81220	M12	22	8,5	6	-/30
K0384.11225	-	-	M12	27	8,5	6	-
K0384.11230	-	K0384.81230	M12	32	8,5	6	-/30
K0384.11232	-	-	M12	34	8,5	6	-
K0384.11240	-	K0384.81240	M12	42	8,5	6	-/30
K0384.11620	-	-	M16	23,3	12	8	-
K0384.11625	-	-	M16	28,3	12	8	-
K0384.11635	-	-	M16	38,3	12	8	-
K0384.11650	-	-	M16	53,3	12	8	-

Ball-end thrust screws without head

with flattened ball

Ⓑ Ⓒ Ⓕ

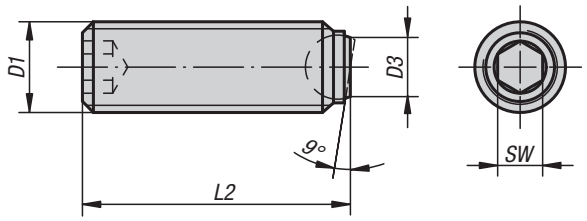

Material:
Screw carbon steel, grade 10.9
Ball, ball-bearing steel or POM.

Version:
Screw black.
Ball hardened bright or POM.

Sample order:
K0383.41012

Note:
Surfaces which are not flat and parallel can be firmly clamped or supported with Form B, C or F with flattened ball, the movable ball can adapt itself up to 9°.
Longer versions have been specially designed to glue in, allowing mechanical connecting elements with external thread to be made cost-effectively for small and medium-sized series.

Drawing reference:
Form B: steel ball
Form C: POM ball
Form F: steel ball diamond grip

KIPP Ball-end thrust screws without head with flattened POM ball

Order No.	Form	D1	D3	L2	Ball Ø	SW	Load rating max. kN (static load only)
K0383.7046	C	M4	1,8	5,9	2,5	2	0,3
K0383.7048	C	M4	1,8	7,9	2,5	2	0,3
K0383.70410	C	M4	1,8	9,9	2,5	2	0,3
K0383.70412	C	M4	1,8	11,9	2,5	2	0,3
K0383.70416	C	M4	1,8	15,9	2,5	2	0,3
K0383.7058	C	M5	2,1	7,8	3	2,5	0,5
K0383.70510	C	M5	2,1	9,8	3	2,5	0,5
K0383.70512	C	M5	2,1	11,8	3	2,5	0,5
K0383.70516	C	M5	2,1	15,8	3	2,5	0,5
K0383.70520	C	M5	2,1	19,8	3	2,5	0,5
K0383.70525	C	M5	2,1	24,8	3	2,5	0,5
K0383.70610	C	M6	3	10,3	4	3	0,9
K0383.70612	C	M6	3	12,3	4	3	0,9
K0383.70616	C	M6	3	16,3	4	3	0,9
K0383.70620	C	M6	3	20,3	4	3	0,9
K0383.70625	C	M6	3	25,3	4	3	0,9
K0383.70810	C	M8	4,2	10,4	5,5	4	1,5
K0383.70812	C	M8	4,2	12,4	5,5	4	1,5
K0383.70816	C	M8	4,2	16,4	5,5	4	1,5
K0383.70820	C	M8	4,2	20,4	5,5	4	1,5
K0383.70825	C	M8	4,2	25,4	5,5	4	1,5
K0383.70830	C	M8	4,2	30,4	5,5	4	1,5

KIPP Ball-end thrust screws without head with flattened serrated steel ball

Order No.	Form	D1	D3	L2	Ball Ø	SW	Load rating max. kN (static load only)
K0383.41012	F	M10	6	12	7	5	20
K0383.41016	F	M10	6	16	7	5	20
K0383.41025	F	M10	6	25	7	5	20
K0383.41035	F	M10	6	35	7	5	20
K0383.41216	F	M12	7,2	16	8,5	6	30
K0383.41220	F	M12	7,2	20	8,5	6	30
K0383.41230	F	M12	7,2	30	8,5	6	30
K0383.41240	F	M12	7,2	40	8,5	6	30
K0383.41620	F	M16	10,7	20	12	8	60
K0383.41625	F	M16	10,7	25	12	8	60
K0383.41635	F	M16	10,7	35	12	8	60
K0383.41650	F	M16	10,7	50	12	8	60

Ball-end thrust screws without head

with flattened ball

KIPP Ball-end thrust screws without head with flattened steel ball

Order No.	Form	D1	D3	L2	Ball Ø	SW	Load rating max. kN (static load only)
K0383.2046	B	M4	1,4	5,8	2,5	2	3,5
K0383.2048	B	M4	1,4	7,8	2,5	2	3,5
K0383.20410	B	M4	1,4	9,8	2,5	2	3,5
K0383.20412	B	M4	1,4	11,8	2,5	2	3,5
K0383.20416	B	M4	1,4	15,8	2,5	2	3,5
K0383.2058	B	M5	2	7,6	3	2,5	4,5
K0383.20510	B	M5	2	9,6	3	2,5	4,5
K0383.20512	B	M5	2	11,6	3	2,5	4,5
K0383.20516	B	M5	2	15,6	3	2,5	4,5
K0383.20520	B	M5	2	19,6	3	2,5	4,5
K0383.20525	B	M5	2	24,6	3	2,5	4,5
K0383.20610	B	M6	3	10,1	4	3	9
K0383.20612	B	M6	3	12,1	4	3	9
K0383.20616	B	M6	3	16,1	4	3	9
K0383.20620	B	M6	3	20,1	4	3	9
K0383.20625	B	M6	3	25,1	4	3	9
K0383.20650	B	M6	3	50,1	4	3	9
K0383.20660	B	M6	3	60,1	4	3	9
K0383.20680	B	M6	3	80,1	4	3	9
K0383.20810	B	M8	4,1	10,3	5,5	4	10
K0383.20812	B	M8	4,1	12,3	5,5	4	10
K0383.20816	B	M8	4,1	16,3	5,5	4	15
K0383.20820	B	M8	4,1	20,3	5,5	4	15
K0383.20825	B	M8	4,1	25,3	5,5	4	15
K0383.20830	B	M8	4,1	30,3	5,5	4	15
K0383.20850	B	M8	4,1	50,3	5,5	4	15
K0383.20860	B	M8	4,1	60,3	5,5	4	15
K0383.20880	B	M8	4,1	80,3	5,5	4	15
K0383.21012	B	M10	5,6	12,3	7	5	20
K0383.21016	B	M10	5,6	16,3	7	5	20
K0383.21020	B	M10	5,6	20,3	7	5	20
K0383.21025	B	M10	5,6	25,3	7	5	20
K0383.21035	B	M10	5,6	35,3	7	5	20
K0383.21216	B	M12	7	16,2	8,5	6	30
K0383.21220	B	M12	7	20,2	8,5	6	30
K0383.21230	B	M12	7	30,2	8,5	6	30
K0383.21240	B	M12	7	40,2	8,5	6	30
K0383.21620	B	M16	10,7	20	12	8	60
K0383.21625	B	M16	10,7	25	12	8	60
K0383.21635	B	M16	10,7	35	12	8	60
K0383.21650	B	M16	10,7	50	12	8	60
K0383.22030	B	M20	13,5	30	15	10	90
K0383.22040	B	M20	13,5	40	15	10	90
K0383.22060	B	M20	13,5	60	15	10	90
K0383.22435	B	M24	15,8	35	18	12	120
K0383.22450	B	M24	15,8	50	18	12	120
K0383.22480	B	M24	15,8	80	18	12	120

Ball-end thrust screws without head

stainless steel with flattened ball

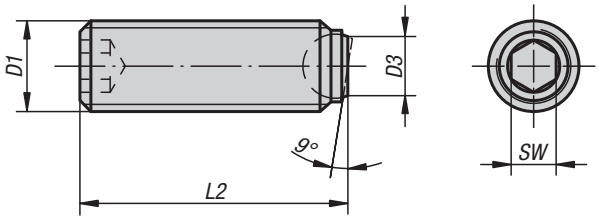

KIPP Ball-end thrust screws without head, stainless steel with flattened ball

Order No.	D1	D3	L2	Ball Ø	SW
K0384.2046	M4	1,4	5,8	2,5	2
K0384.2048	M4	1,4	7,8	2,5	2
K0384.20410	M4	1,4	9,8	2,5	2
K0384.20412	M4	1,4	11,8	2,5	2
K0384.20416	M4	1,4	15,8	2,5	2
K0384.2058	M5	2	7,6	3	2,5
K0384.20510	M5	2	9,6	3	2,5
K0384.20512	M5	2	11,6	3	2,5
K0384.20516	M5	2	15,6	3	2,5
K0384.20520	M5	2	19,6	3	2,5
K0384.20525	M5	2	24,6	3	2,5
K0384.20610	M6	3	10,1	4	3
K0384.20612	M6	3	12,1	4	3
K0384.20616	M6	3	16,1	4	3
K0384.20620	M6	3	20,1	4	3
K0384.20625	M6	3	25,1	4	3
K0384.20650	M6	3	50,1	4	3
K0384.20660	M6	3	60,1	4	3
K0384.20680	M6	3	80,1	4	3
K0384.20810	M8	4,1	10,3	5,5	4
K0384.20812	M8	4,1	12,3	5,5	4
K0384.20816	M8	4,1	16,3	5,5	4
K0384.20820	M8	4,1	20,3	5,5	4
K0384.20825	M8	4,1	25,3	5,5	4
K0384.20830	M8	4,1	30,3	5,5	4
K0384.20850	M8	4,1	50,3	5,5	4
K0384.20860	M8	4,1	60,3	5,5	4
K0384.20880	M8	4,1	80,3	5,5	4
K0384.21012	M10	5,6	12,3	7	5
K0384.21016	M10	5,6	16,3	7	5
K0384.21020	M10	5,6	20,3	7	5
K0384.21025	M10	5,6	25,3	7	5
K0384.21035	M10	5,6	35,3	7	5
K0384.21216	M12	7	16,2	8,5	6
K0384.21220	M12	7	20,2	8,5	6
K0384.21230	M12	7	30,2	8,5	6
K0384.21240	M12	7	40,2	8,5	6
K0384.21620	M16	10,7	20	12	8
K0384.21625	M16	10,7	25	12	8
K0384.21635	M16	10,7	35	12	8
K0384.21650	M16	10,7	50	12	8

Material:
Screw and ball stainless steel.

Version:
Stainless steel bright.

Sample order:
K0384.2046

Note:
Surfaces which are not flat and parallel can be firmly clamped or supported with a flattened ball, the movable ball can adapt itself up to 9°.
Longer versions have been designed especially to be glued in. This enables mechanical connecting elements with male thread to be made cost-effectively for small and medium-sized series.

Ball-end thrust screws without head

with flattened ball and rotation lock

BV FV

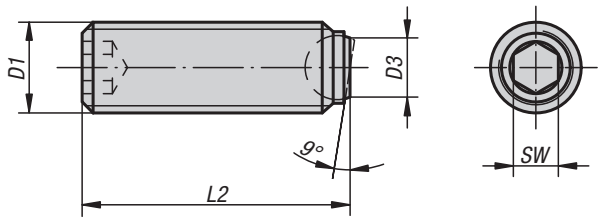

Material:
Screw, high-carbon steel, grade 10.9
Ball, ball-bearing steel.

Version:
Screw black.
Ball hardened, bright.

Sample order:
K0383.50820

Note:
Surfaces which are not flat and parallel can be firmly clamped or supported with a flattened ball, the movable ball can adapt itself up to 9°.
Longer versions have been designed especially to be glued in. This enables mechanical connecting elements with male thread to be made cost-effectively for small and medium-sized series.

Drawing reference:
Form BV: flattened ball non-rotating
Form FV: flattened ball diamond grip non-rotating

KIPP Ball-end thrust screws without head, with flattened ball and rotation lock

Order No. Form BV	Order No. Form FV	D1	D3	L2	Ball Ø	SW	Load rating max. kN (static load only)
K0383.50612	-	M6	3	12,1	4	3	6
K0383.50616	-	M6	3	16,1	4	3	6
K0383.50620	-	M6	3	20,1	4	3	6
K0383.50625	-	M6	3	25,1	4	3	6
K0383.50816	K0383.60816	M8	4,1	16,3	5,5	4	9
K0383.50820	K0383.60820	M8	4,1	20,3	5,5	4	9
K0383.50825	K0383.60825	M8	4,1	25,3	5,5	4	9
K0383.50830	K0383.60830	M8	4,1	30,3	5,5	4	9
K0383.51020	K0383.61020	M10	5,6	20,3	7	5	12
K0383.51025	K0383.61025	M10	5,6	25,3	7	5	12
K0383.51035	K0383.61035	M10	5,6	35,3	7	5	12
K0383.51040	K0383.61040	M10	5,6	40,2	7	5	12
K0383.51220	K0383.61220	M12	7	20,2	8,5	6	18
K0383.51230	K0383.61230	M12	7	30,2	8,5	6	18
K0383.51240	K0383.61240	M12	7	40,2	8,5	6	18
K0383.51250	K0383.61250	M12	7	50	8,5	6	18
K0383.51635	K0383.61635	M16	10,7	35	12	8	36
K0383.51650	K0383.61650	M16	10,7	50	12	8	36
K0383.52030	K0383.62030	M20	13,5	30	15	10	60
K0383.52040	K0383.62040	M20	13,5	40	15	10	60
K0383.52050	K0383.62050	M20	13,5	50	15	10	60
K0383.52060	K0383.62060	M20	13,5	60	15	10	60
K0383.52435	K0383.62435	M24	15,8	35	18	12	80
K0383.52450	K0383.62450	M24	15,8	50	18	12	80
K0383.52480	K0383.62480	M24	15,8	80	18	12	80

Ball-end thrust screws without head

stainless steel with flattened ball and rotation lock

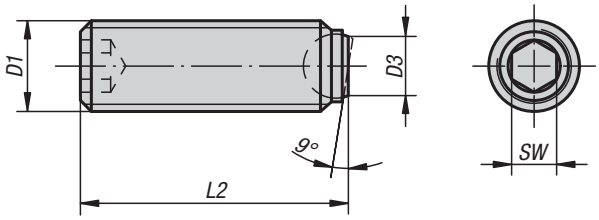

Material:
Screw and ball stainless steel.

Version:
Stainless steel bright.

Sample order:
K0384.50612

Note:
Surfaces which are not flat and parallel can be firmly clamped or supported with a flattened ball, the movable ball can adapt itself up to 9°.
Longer versions have been designed especially to be glued in. This enables mechanical connecting elements with male thread to be made cost-effectively for small and medium-sized series. Ball has rotation lock.

KIPP Ball-end thrust screws without head stainless steel with flattened ball and rotation lock

Order No.	D1	D3	L2	Ball Ø	SW
K0384.50612	M6	3	12,1	4	3
K0384.50616	M6	3	16,1	4	3
K0384.50620	M6	3	20,1	4	3
K0384.50625	M6	3	25,1	4	3
K0384.50816	M8	4,1	16,3	5,5	4
K0384.50820	M8	4,1	20,3	5,5	4
K0384.50825	M8	4,1	25,3	5,5	4
K0384.50830	M8	4,1	30,3	5,5	4
K0384.51020	M10	5,6	20,3	7	5
K0384.51025	M10	5,6	25,3	7	5
K0384.51035	M10	5,6	35,3	7	5
K0384.51040	M10	5,6	40,2	7	5
K0384.51220	M12	7	20,2	8,5	6
K0384.51230	M12	7	30,2	8,5	6
K0384.51240	M12	7	40,2	8,5	6
K0384.51250	M12	7	50	8,5	6
K0384.51635	M16	10,7	35	12	8
K0384.51650	M16	10,7	50	12	8

Ball-end thrust screws without head

with full ball, LONG-LOK secured

Ⓐ Ⓓ

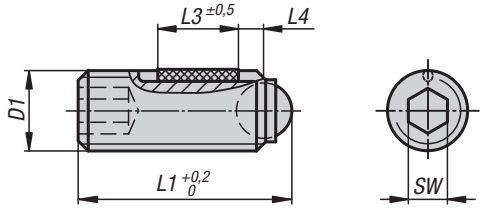

Note:
Ball-end thrust screws with full ball are used when a clean, polished contact surface is required.

Drawing reference:
Form A: steel ball
Form D: POM ball

L4 = approx. 2x pitch

Material:
Screw carbon steel, grade 10.9
Ball, ball-bearing steel or POM.
LONG-LOK thread lock nylon.

Version:
Screw black.
Ball hardened, bright.

Sample order:
K0666.1046

KIPP Ball-end thrust screws without head, with full ball, LONG-LOK secured

Order No. Form A	Order No. Form D	D1	L1	L3	Ball Ø	SW	Load rating max. kN (static load only)
K0666.1046	K0666.3046	M4	6	2,5	2,5	2	3,5/0,3
K0666.10410	K0666.30410	M4	10	3,5	2,5	2	3,5/0,3
K0666.10416	K0666.30416	M4	16	5	2,5	2	3,5/0,3
K0666.1058	K0666.3058	M5	8	3,5	3	2,5	4,5/0,5
K0666.10512	K0666.30512	M5	12	5	3	2,5	4,5/0,5
K0666.10520	K0666.30520	M5	20	6	3	2,5	4,5/0,5
K0666.10610	K0666.30610	M6	10,8	3,5	4	3	9/0,9
K0666.10616	K0666.30616	M6	16,8	7	4	3	9/0,9
K0666.10620	K0666.30620	M6	20,8	7	4	3	9/0,9
K0666.10625	K0666.30625	M6	25,8	7	4	3	9/0,9
K0666.10650	-	M6	50,8	7	4	3	9
K0666.10660	-	M6	60,8	7	4	3	9
K0666.10810	K0666.30810	M8	11,2	3,5	5,5	4	10/1,5
K0666.10812	K0666.30812	M8	13,2	5	5,5	4	10/1,5
K0666.10820	K0666.30820	M8	21,2	8	5,5	4	15/1,5
K0666.10825	K0666.30825	M8	26,2	8	5,5	4	15/1,5
K0666.10830	K0666.30830	M8	31,2	8	5,5	4	15/1,5
K0666.10850	-	M8	51,2	8	5,5	4	15
K0666.10860	-	M8	61,2	8	5,5	4	15
K0666.10880	-	M8	81,2	8	5,5	4	15
K0666.11012	K0666.31012	M10	13,7	5	7	5	20/2
K0666.11016	K0666.31016	M10	17,7	9	7	5	20/2
K0666.11020	K0666.31020	M10	21,7	9	7	5	20/2
K0666.11025	K0666.31025	M10	26,7	9	7	5	20/2
K0666.11035	K0666.31035	M10	36,7	9	7	5	20/2
K0666.11216	K0666.31216	M12	18	8	8,5	6	30/3
K0666.11220	K0666.31220	M12	22	10	8,5	6	30/3
K0666.11230	K0666.31230	M12	32	10	8,5	6	30/3
K0666.11240	K0666.31240	M12	42	10	8,5	6	30/3
K0666.11620	-	M16	23,3	10	12	8	60
K0666.11625	-	M16	28,3	14	12	8	60
K0666.11635	-	M16	38,3	14	12	8	60
K0666.11650	-	M16	53,3	14	12	8	60

Ball-end thrust screws without head

with flattened ball LONG-LOK secured

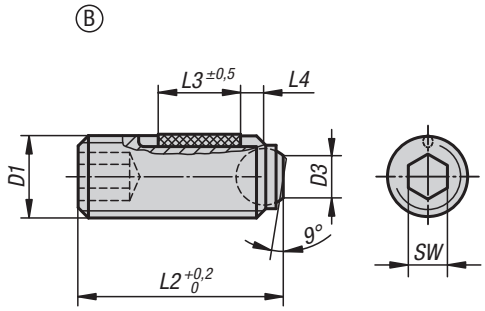

Material:
Screw carbon steel, grade 10.9
Ball, ball-bearing steel.
LONG-LOK thread lock nylon.

Version:
Screw black.
Ball hardened, bright.

Sample order:
K0666.20610

Note:
Surfaces which are not flat and parallel can be firmly clamped or supported with a flattened ball, the movable ball can adapt itself up to 9°.

Drawing reference:
Form B: with flattened ball

L4 = approx. 2x pitch

KIPP Ball-end thrust screws without head, with flattened ball, steel, LONG-LOK secured

Order No. Form B	D1	D3	L2	L3	Ball Ø	SW	Load rating max. kN (static load only)
K0666.20610	M6	3	10,1	3,5	4	3	9
K0666.20616	M6	3	16,1	7	4	3	9
K0666.20620	M6	3	20,1	7	4	3	9
K0666.20625	M6	3	25,1	7	4	3	9
K0666.20650	M6	3	50,1	7	4	3	9
K0666.20660	M6	3	60,1	7	4	3	9
K0666.20810	M8	4,1	10,3	3,5	5,5	4	10
K0666.20812	M8	4,1	12,3	5	5,5	4	10
K0666.20820	M8	4,1	20,3	8	5,5	4	15
K0666.20825	M8	4,1	25,3	8	5,5	4	15
K0666.20830	M8	4,1	30,3	8	5,5	4	15
K0666.20850	M8	4,1	50,3	8	5,5	4	15
K0666.20860	M8	4,1	60,3	8	5,5	4	15
K0666.20880	M8	4,1	80,3	8	5,5	4	15
K0666.21012	M10	5,6	12,3	5	7	5	20
K0666.21016	M10	5,6	16,3	9	7	5	20
K0666.21020	M10	5,6	20,3	9	7	5	20
K0666.21025	M10	5,6	25,3	9	7	5	20
K0666.21035	M10	5,6	35,3	9	7	5	20
K0666.21216	M12	7	16,2	8	8,5	6	30
K0666.21220	M12	7	20,2	10	8,5	6	30
K0666.21230	M12	7	30,2	10	8,5	6	30
K0666.21240	M12	7	40,2	10	8,5	6	30
K0666.21620	M16	10,7	20	10	12	8	60
K0666.21625	M16	10,7	25	14	12	8	60
K0666.21635	M16	10,7	35	14	12	8	60
K0666.21650	M16	10,7	50	14	12	8	60

Thrust screws with rounded half-dog point

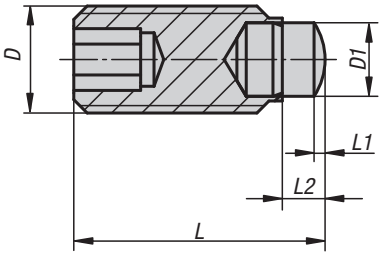

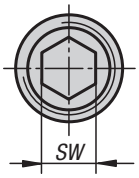

Material:
Screw steel grade 10.9.
Pin tool steel.

Version:
Pin, hardened.
Screw and pin black oxidised.

Sample order:
K0403.05X09

Note:
These rounded half-dog point thrust screws are used when a punctiform thrust or support point are required.

KIPP Thrust screws with rounded half-dog point

Order No.	D	D1	L	L1	L2	SW	Load rating max. kN (static load only)
K0403.05X09	M5	3	9	0,5	1,8	2,5	4,5
K0403.05X13	M5	3	13	0,5	1,8	2,5	4,5
K0403.05X17	M5	3	17	0,5	1,8	2,5	4,5
K0403.05X21	M5	3	21	0,5	1,8	2,5	4,5
K0403.06X14	M6	4	14,3	0,8	2,7	3	9
K0403.06X18	M6	4	18,3	0,8	2,7	3	9
K0403.06X22	M6	4	22,3	0,8	2,7	3	9
K0403.06X27	M6	4	27,3	0,8	2,7	3	9
K0403.08X15	M8	5,5	14,8	0,8	3,2	4	15
K0403.08X19	M8	5,5	18,8	0,8	3,2	4	15
K0403.08X23	M8	5,5	22,8	0,8	3,2	4	15
K0403.08X28	M8	5,5	27,8	0,8	3,2	4	15
K0403.08X35	M8	5,5	34,8	0,8	3,2	4	15
K0403.10X19	M10	7	18,9	1,1	3,5	5	20
K0403.10X23	M10	7	22,9	1,1	3,5	5	20
K0403.10X28	M10	7	27,9	1,1	3,5	5	20
K0403.10X35	M10	7	34,9	1,1	3,5	5	20
K0403.10X43	M10	7	42,9	1,1	3,5	5	20

Thrust screws with point

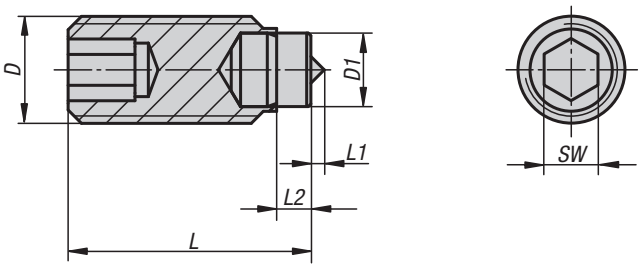

Material:
Screw steel grade 10.9.
Pin tool steel.

Version:
Pin, hardened.
Screw and pin black oxidised.

Sample order:
K0272.05X09

Note:
These thrust screws with point are used when additional positive fixation is required.

KIPP Thrust screws with point

Order No.	D	D1	L	L1	L2	SW	Load rating max. kN (static load only)
K0272.05X09	M5	3	8,5	0,5	1,3	2,5	4,5
K0272.05X13	M5	3	12,5	0,5	1,3	2,5	4,5
K0272.05X17	M5	3	16,5	0,5	1,3	2,5	4,5
K0272.05X21	M5	3	20,5	0,5	1,3	2,5	4,5
K0272.06X14	M6	4	13,5	0,8	1,9	3	9
K0272.06X18	M6	4	17,5	0,8	1,9	3	9
K0272.06X22	M6	4	21,5	0,8	1,9	3	9
K0272.06X27	M6	4	26,5	0,8	1,9	3	9
K0272.08X14	M8	5,5	14	1	2,4	4	15
K0272.08X18	M8	5,5	18	1	2,4	4	15
K0272.08X22	M8	5,5	22	1	2,4	4	15
K0272.08X27	M8	5,5	27	1	2,4	4	15
K0272.08X34	M8	5,5	34	1	2,4	4	15
K0272.10X18	M10	7	18	1,5	2,6	5	20
K0272.10X22	M10	7	22	1,5	2,6	5	20
K0272.10X27	M10	7	27	1,5	2,6	5	20
K0272.10X34	M10	7	34	1,5	2,6	5	20
K0272.10X42	M10	7	42	1,5	2,6	5	20

Notes

Grippers and inserts

round

Form C, E, K

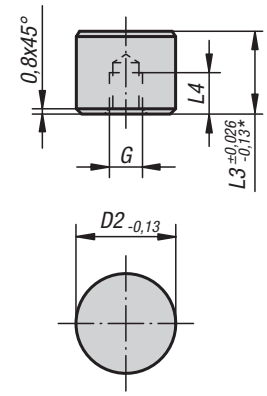

* Applies to Form K

Form O
stainless steel insert
diamond impregnated

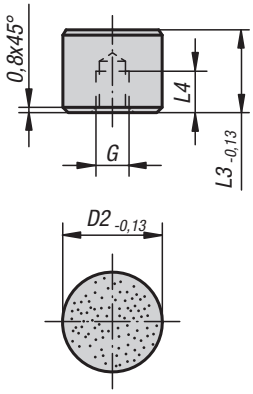

Form P
stainless steel insert,
PUR surface

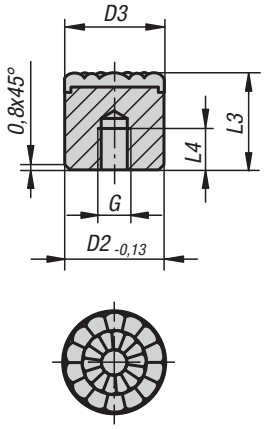

Form F
diamond grip insert

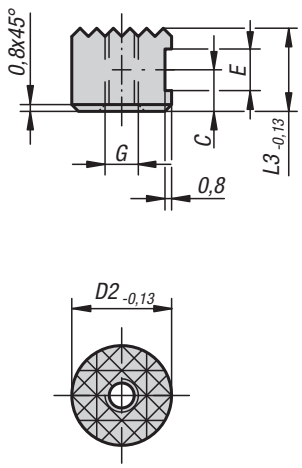

Form M
carbide steel
diamond grip insert

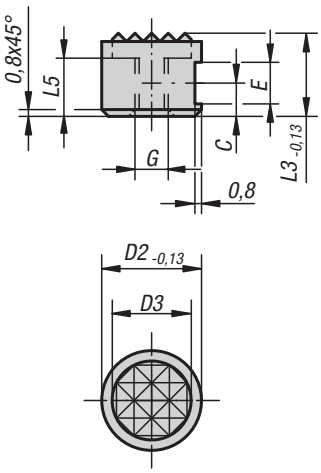

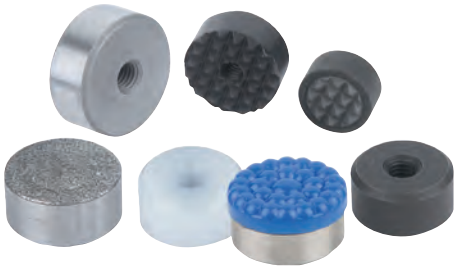

Material:
Form C, F, M tool steel
Form E, O, P stainless steel
Form K POM

Version:
Form C hardened and black oxidised.
Form E hardened, bright.
Form K white.
Form O with diamond impregnated surface comparable to 100 grade abrasive grit.
Form P with polyurethane surface, hardness Shore 60.
Form F, hardened and black oxidised.
Form M with carbide serrations, black oxidised.

Sample order:
K0385.2510

Note:
Grippers and inserts are ideal for use in clamping arms, gripping systems, clamping fixtures, clamping jaws and self-aligning pads. The use of grippers allows the transfer of very high torque values and above average grip, even with hard materials and surface irregularities.

Form O: The abrasive diamond surface is bonded firmly to the base. It is ideally suited to supporting smooth or slippery applications with a minimum of clamping pressure. This allows the diamond particles to get a firm grip on a very small area with minimum damage to the surface.
The diamond surface offers excellent wear resistance.

Form P: The polyurethane surface is vulcanised firmly to the ball. It is abrasion-resistant and does not discolour. It offers optimum protection against damage to delicate surfaces. The pearl-like surface gives a firm grip and allows air to escape so as to prevent any suction effect between the contact surface and the self-aligning pads.

Grippers and inserts can be fitted in the following self-aligning pads:
Order No. K0285.117X022 up to K0285.936X036
Order No. K0289.110X015 up to K0289.924X100
Order No. K0291.120X030 up to K0291.924X080

Grippers and inserts

round

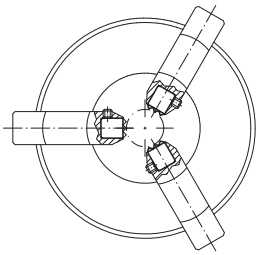

KIPP Round inserts Form C, E, K, O

Order No. Form C	Order No. Form E	Order No. Form K	Order No. Form O	D2	L3	L4	G
K0385.10108	K0385.10102	K0385.10109	K0385.10105	10	10	5	M5
K0385.10128	K0385.10122	K0385.10129	K0385.10125	10	12	6,4	M5
K0385.12108	K0385.12102	K0385.12109	K0385.12105	12	10	5	M5
K0385.12128	K0385.12122	K0385.12129	K0385.12125	12	12	6,4	M5
K0385.16108	K0385.16102	K0385.16109	K0385.16105	16	10	5	M6
K0385.16128	K0385.16122	K0385.16129	K0385.16125	16	12	6,4	M6
K0385.20108	K0385.20102	K0385.20109	K0385.20105	20	10	5	M6
K0385.20128	K0385.20122	K0385.20129	K0385.20125	20	12	6,4	M6
K0385.25108	K0385.25102	K0385.25109	K0385.25105	25	10	5	M6
K0385.25128	K0385.25122	K0385.25129	K0385.25125	25	12	6,4	M6

KIPP Round inserts Form P

Order No.	Form	D2	D3	L3	L4	G
K0385.08126	P	8	8	12	6	M4
K0385.10126	P	10	10	12	6	M5
K0385.12126	P	12	13	12	6	M5
K0385.16126	P	16	16	12	6	M6
K0385.20126	P	20	21	12	6	M6
K0385.25126	P	25	27	12	6	M6

KIPP Grippers Form F, M

Order No. Form F	Order No. Form M	D2	D3	L3	L5	C	E	G
K0385.1010	K0385.10107	10	-/7,9	10	-/6	4,5	4,75	M5
K0385.1210	K0385.12107	12	-/9,5	10	-/6	4,5	4,75	M5
K0385.1212	K0385.12127	12	-/9,5	12	-/7	6	4,75	M5
K0385.1610	K0385.16107	16	-/12,7	10	-/6	4,5	4,75	M6
K0385.2010	K0385.20107	20	-/15,9	10	-/6	4,5	4,75	M6
K0385.2510	K0385.25107	25	-/19	10	-/6	4,5	4,75	M6

Grippers and inserts

round, with counterbore

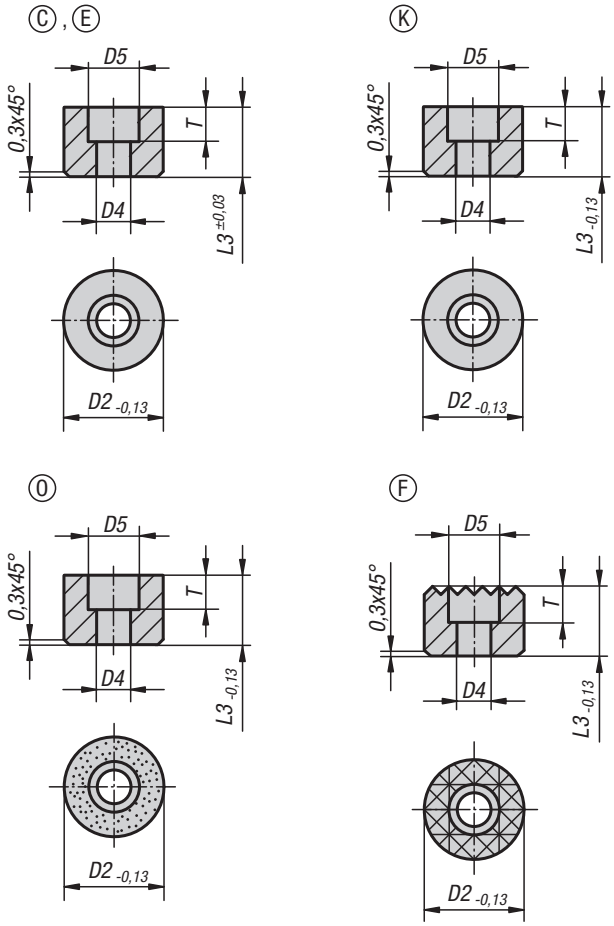

Material:
Form C, F tool steel
Form E, O stainless steel
Form K POM

Version:
Form C, F hardened and black oxidised.
Form E, hardened, bright.
Form K white.
Form O with diamond impregnated surface comparable to 100 grade abrasive grit.

Sample order:
K0385.110108

Note:
Grippers and inserts are ideal for use in clamping arms, gripping systems, clamping fixtures, clamping jaws and self-aligning pads. The use of grippers allows the transfer of very high torque values and above average grip, even with hard materials and surface irregularities.

Form O: The abrasive diamond surface is bonded firmly to the base. It is ideally suited to supporting smooth or slippery applications with a minimum of clamping pressure. This allows the diamond particles to get a firm grip on a very small area with minimum damage to the surface. The diamond surface offers excellent wear resistance.

KIPP Round inserts

Order No. Form C	Order No. Form E	Order No. Form K	Order No. Form O	D2	D4	D5	L3	T
K0385.110108	K0385.110102	K0385.110109	K0385.110105	10	3,4	6	10	5
K0385.110128	K0385.110122	K0385.110129	K0385.110125	10	3,4	6	12	5
K0385.112108	K0385.112102	K0385.112109	K0385.112105	12	4,5	9	10	5,6
K0385.112128	K0385.112122	K0385.112129	K0385.112125	12	4,5	9	12	5,6
K0385.116108	K0385.116102	K0385.116109	K0385.116105	16	5,5	11	10	6,6
K0385.116128	K0385.116122	K0385.116129	K0385.116125	16	5,5	11	12	6,6
K0385.120108	K0385.120102	K0385.120109	K0385.120105	20	6,6	11	10	7,6
K0385.120128	K0385.120122	K0385.120129	K0385.120125	20	6,6	11	12	7,6
K0385.125108	K0385.125102	K0385.125109	K0385.125105	25	6,6	11	10	7,6
K0385.125128	K0385.125122	K0385.125129	K0385.125125	25	6,6	11	12	7,6

KIPP Round grippers

Order No. Form F	D2	D4	D5	L3	T
K0385.11210	12	4,5	8	10	5,6
K0385.11212	12	4,5	8	12	5,6
K0385.11610	16	4,5	8	10	5,6
K0385.11612	16	4,5	8	12	5,6
K0385.12010	20	5,5	10	10	6,6
K0385.12012	20	5,5	10	12	6,6
K0385.12510	25	6,6	11	10	7,6
K0385.12512	25	6,6	11	12	7,6

Gripper screws

hexagonal

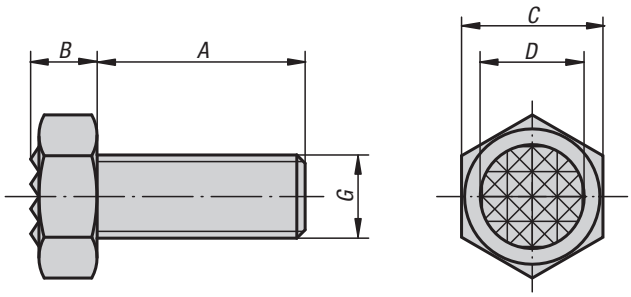

Material:
Hex head screw, grade 10.9.
Serrations carbide, hardness 72-74 HRC.

Version:
Black oxidised.

Sample order:
K0386.1710

Note:
The serrated carbide tips are soldered in.

KIPP Gripper screws, hexagonal

Order No.	A	B	C	D	G	Serration
K0386.1006	25	5	10	7,9	M6	extra fine
K0386.1308	25	6,4	13	9,5	M8	fine
K0386.1710	25	8,3	17	12,7	M10	fine
K0386.17102	40	8,3	17	12,7	M10	fine
K0386.1912	25	8,7	19	15,9	M12	fine
K0386.19122	40	8,7	19	15,9	M12	fine
K0386.2416	35	11	24	19	M16	fine
K0386.24162	50	11	24	19	M16	fine
K0386.3020	40	13,7	30	25,4	M20	extra fine
K0386.30202	60	13,7	30	25,4	M20	extra fine

Gripper pads

square

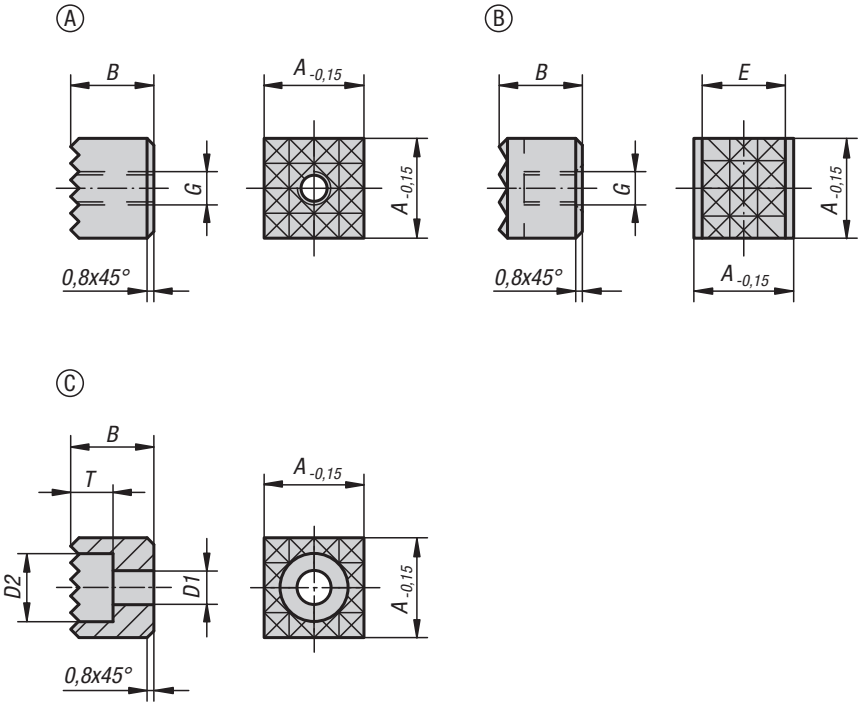

Material:
Hardened tool steel or carbide.

Version:
Black oxidised.

Sample order:
K0387.2506

Note:
Grippers and inserts are ideal for use in clamping arms, gripping systems, clamping fixtures, clamping jaws and self-aligning pads.
Grippers transfer very high torque values,even with hard materials and surface irregularities. Grippers guarantee above average holding forces at high cutting forces.
The serrated carbide tips are soldered in.

Drawing reference:
Form A: tool steel
Form B: tool steel, carbide diamond grip
Form C: tool steel

KIPP Gripper pads, square

Order No.	Form	A	B	D1	D2	E	G	T	Serration
K0387.1005	A	10	10	-	-	-	M5	-	extra fine
K0387.101205	A	10	12	-	-	-	M5	-	extra fine
K0387.1205	A	12	10	-	-	-	M5	-	fine
K0387.121205	A	12	12	-	-	-	M5	-	fine
K0387.1606	A	16	10	-	-	-	M6	-	fine
K0387.161206	A	16	12	-	-	-	M6	-	fine
K0387.2005	A	20	10	-	-	-	M5	-	fine
K0387.201205	A	20	12	-	-	-	M5	-	fine
K0387.2506	A	25	10	-	-	-	M6	-	fine
K0387.251206	A	25	12	-	-	-	M6	-	fine
K0387.12057	B	12	10	-	-	10,3	M5	-	fine
K0387.1210048	C	12	10	4,5	8	-	-	5,6	fine
K0387.1212048	C	12	12	4,5	8	-	-	5,6	fine
K0387.1610048	C	16	10	4,5	8	-	-	5,6	fine
K0387.1612048	C	16	12	4,5	8	-	-	5,6	fine
K0387.2010058	C	20	10	5,5	10	-	-	6,6	fine
K0387.2012058	C	20	12	5,5	10	-	-	6,6	fine
K0387.2510068	C	25	10	6,6	11	-	-	7,6	fine
K0387.2512068	C	25	12	6,6	11	-	-	7,6	fine

Gripper studs

Ⓐ

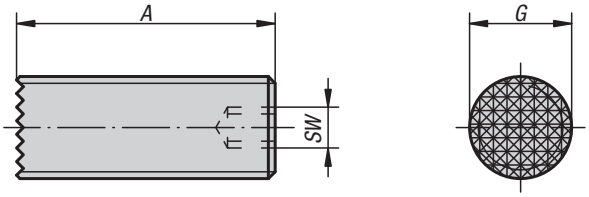

Ⓑ

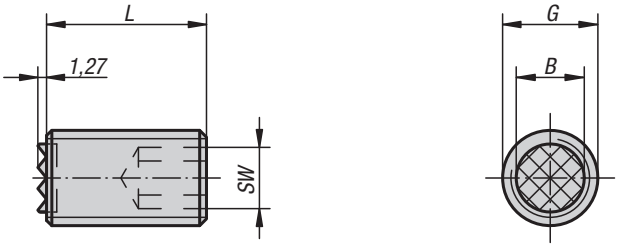

Ⓒ

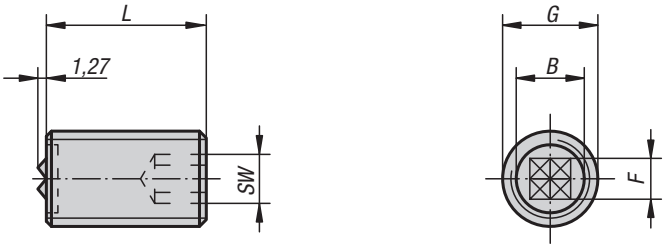

Material:
Hardened tool steel or carbide.

Version:
Black oxidised.

Sample order:
K0388.5012

Note:
The full thread on the grippers allows exact adjustment to the clamping application.
The carbide tips are soldered in.

Drawing reference:
Form A: tool steel
Form B: tool steel, carbide diamond grip
Form C: 4-point carbide insert

KIPP Gripper studs

Order No.	Form	A	L	B	G	F	SW
K0388.4010	A	40	-	-	M10	-	3
K0388.4012	A	40	-	-	M12	-	5
K0388.4016	A	40	-	-	M16	-	6
K0388.4020	A	40	-	-	M20	-	8
K0388.2510	B	-	25	6,4	M10	-	5
K0388.5010	B	-	50	6,4	M10	-	5
K0388.2512	B	-	25	7,9	M12	-	6
K0388.5012	B	-	50	7,9	M12	-	6
K0388.2516	B	-	25	11,2	M16	-	8
K0388.5016	B	-	50	11,2	M16	-	8
K0388.2520	B	-	25	12,7	M20	-	10
K0388.5020	B	-	50	12,7	M20	-	10
K0388.25124	C	-	25	7,9	M12	6,5	6
K0388.50124	C	-	50	7,9	M12	6,5	6
K0388.25164	C	-	25	11,2	M16	8	8
K0388.50164	C	-	50	11,2	M16	8	8
K0388.25204	C	-	25	12,7	M20	8	10
K0388.50204	C	-	50	12,7	M20	8	10

Thrust screws

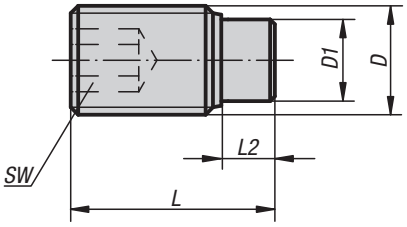

Material:
Screw grade 10.9.
Thrust pin brass or polyacetal.

Version:
Screw black oxidised.

Sample order:
K0389.04X105 (include length L.)

Note:
Thrust screws are ideal for clamping or exerting pressure on threaded spindles, axles, shafts and treated surfaces without marring.

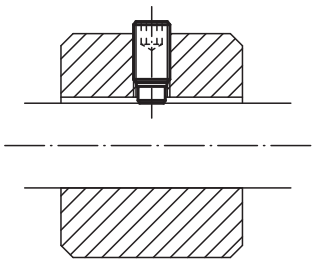

KIPP Thrust screws

Order No.	Component material	D	D1	L	L2	SW
K0389.04X	brass	M4	2,5	6,5/10,5/16,5/30,5/40,5	1,2	2
K0389.05X	brass	M5	3	12,5/20,5/30,5/40,5/8,5	1,3	2,5
K0389.06X	brass	M6	4	11,5/17,5/26,5/41,5/51,5/61,5	1,9	3
K0389.08X	brass	M8	5,5	12/22/32/52/62/82	2,4	4
K0389.10X	brass	M10	7	14/18/27/37/52/62/82	2,6	5
K0389.12X	brass	M12	8,5	18,5/22,5/32,5/42,5/52,5/62,5/82,5	3,3	6

Order No.	Component material	D	D1	L	L2	SW
K0389.104X	POM	M4	2	11/13/17/31/41/7/9	1,7	2
K0389.105X	POM	M5	3	11/13/17/21/31/41/9	1,8	2,5
K0389.106X	POM	M6	3,5	11,3/13,3/17,3/21,3/26,3/41,3/51,3/61,3	1,7	3
K0389.108X	POM	M8	5	13,6/17,6/21,6/26,6/33,6/51,6/61,6/81,6	2	4
K0389.110X	POM	M10	6,5	17,9/21,9/26,9/33,9/41,9/51,9/61,9/81,9	2,5	5
K0389.112X	POM	M12	8	22,1/27,1/34,1/42,1/52,1/62,1/82,1	2,9	6

Thrust screws

stainless steel

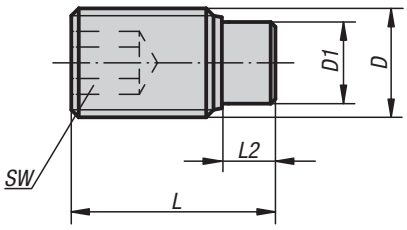

Material:
Screw stainless steel.
Pin brass or polyacetal.

Version:
Screw bright.

Sample order:
K0667.041X105 (include length L.)

Note:
Thrust screws are ideal for clamping or exerting pressure on threaded spindles, axles, shafts and treated surfaces without marring.

KIPP Thrust screws, stainless steel

Order No.	Component material	D	D1	L	L2	SW
K0667.041X	brass	M4	2,5	6,5/10,5/16,5/30,5/40,5	1,2	2
K0667.051X	brass	M5	3	8,5/12,5/20,5/30,5/40,5	1,3	2,5
K0667.061X	brass	M6	4	11,5/13,5/17,5/21,5/26,5/41,5/51,5/61,5	1,9	3
K0667.081X	brass	M8	5,5	12/22/32/52/62/82	2,4	4
K0667.101X	brass	M10	7	14/18/27/37	2,6	5
K0667.121X	brass	M12	8,5	22,5/32,5/42,5	3,3	6

Order No.	Component material	D	D1	L	L2	SW
K0667.1041X	POM	M4	2	7/9/11/13/17/31/41	1,7	2
K0667.1051X	POM	M5	3	9/11/13/17/21/31/41	1,8	2,5
K0667.1061X	POM	M6	3,5	11,3/13,3/17,3/21,3/26,3/41,3/51,3/61,3	1,7	3
K0667.1081X	POM	M8	5	13,6/17,6/21,6/26,6/33,6/51,6/61,6/81,6	2	4
K0667.1101X	POM	M10	6,5	17,9/21,9/26,9/36,9	2,5	5
K0667.1121X	POM	M12	8	22,1/32,1/42,1	2,9	6

Thrust screws

LONG-LOK secured

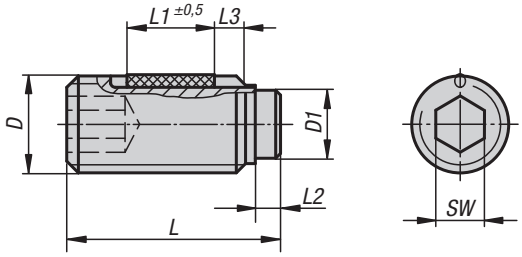

Material:
Screw grade 10.9.
Pin brass or POM.
LONG-LOK thread lock nylon.

Version:
Screw black oxidised.

Sample order:
K0668.204X65 (include length L)

Note:
Thrust screws are ideal for clamping or exerting pressure on threaded spindles, axles, shafts and treated surfaces without marring.

Drawing reference:
L3= approx. 2x thread pitch

KIPP Thrust screws, LONG-LOK secured

Order No.	Component material	D	D1	L	L1	L2	SW
K0668.204X	brass	M4	2,5	6,5/10,5/16,5/30,5/40,5	2,5/3,5/5/5/5	1,2	2
K0668.205X	brass	M5	3	8,5/12,5/20,5/30,5/40,5	3,5/5/6/6/6	1,3	2,5
K0668.206X	brass	M6	4	11,5/17,5/26,5/41,5/51,5/61,5	3,5/7/7/7/7/7	1,9	3
K0668.208X	brass	M8	5,5	12/22/32/52/62/82	3,5/8/8/8/8/8	2,4	4
K0668.210X	brass	M10	7	14/18/27/37/52/62/82	5/9/9/9/9/9/9	2,6	5
K0668.212X	brass	M12	8,5	18,5/22,5/32,5/42,5/52,5/62,5/82,5	8/10/10/10/10/10/10	3,3	6

Order No.	Component material	D	D1	L	L1	L2	SW
K0668.304X	POM	M4	2	7/9/11/13/17/31/41	2,5/3,5/3,5/5/5/5/5	1,7	2
K0668.305X	POM	M5	3	9/11/13/17/21/31/41	3,5/3,5/5/6/6/6/6	1,8	2,5
K0668.306X	POM	M6	3,5	11,3/13,3/17,3/21,3/26,3/41,3/51,3/61,3	3,5/5/7/7/7/7/7/7	1,7	3
K0668.308X	POM	M8	5	13,6/17,6/21,6/26,6/33,6/51,6/61,6/81,6	5/8/8/8/8/8/8/8	2	4
K0668.310X	POM	M10	6,5	17,9/21,9/26,9/33,9/41,9/51,9/61,9/81,9	9/9/9/9/9/9/9/9	2,5	5
K0668.312X	POM	M12	8	22,1/27,1/34,1/42,1/52,1/62,1/82,1	10/10/10/10/10/10/10	2,9	6

Locating pins

with ball-end Form A

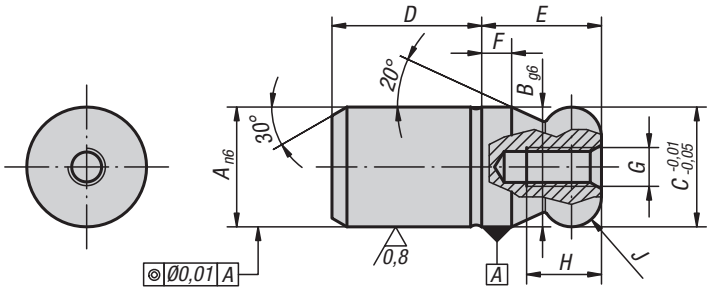

Material:
Tool steel or 1.4305 stainless steel.

Version:
Steel hardened and ground.
Stainless steel ground and kolsterised.

Sample order:
K0350.12

Note:
Ball end locating pins are specially designed to ease the locating process. The tendency to jam, caused by the locating hole not being at right angles to the pin or by the pushing force not being parallel to the pin axis, is minimized by the ball-end form (see illustration 1 for K0351 Form B)

KIPP Locating pins with ball-end Form A

Order No. tool steel	Order No. stainless steel	A	B	C	D	E	F	G	H	J
K0350.05	**K0350.505**	5	5	5	6	5	2	M2,5	4,5	R 1
K0350.06	**K0350.506**	6	6	6	8	6	2	M3	5	R 1
K0350.08	**K0350.508**	8	8	8	10	8	2	M3	6	R 2
K0350.10	**K0350.510**	10	10	10	13	10	2,5	M3	6	R 2,5
K0350.12	**K0350.512**	12	12	12	15	12	3	M4	8	R 3
K0350.14	**K0350.514**	14	14	14	17	14	3,5	M4	8	R 3,5
K0350.16	**K0350.516**	16	16	16	20	16	4	M5	10	R 4
K0350.20	**K0350.520**	20	20	20	25	20	5	M5	10	R 5
K0350.25	-	25	25	25	25	25	6	M5	10	R 6
K0350.30	-	30	30	30	30	30	8	M6	12	R 8
K0350.40	-	40	40	40	40	40	10	M6	12	R 10
K0350.50	-	50	50	50	50	50	12	M6	12	R 12

Locating pins

with flattened ball-end Form C

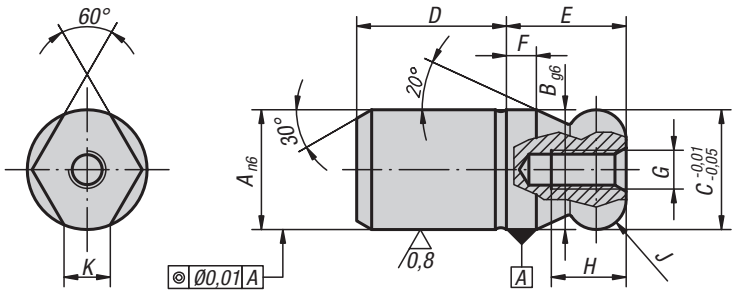

Material:
Tool steel or 1.4305 stainless steel.

Version:
Steel hardened and ground.
Stainless steel ground and kolsterised.

Sample order:
K0350.162

Note:
Ball end locating pins are specially designed to ease the locating process. The tendency to jam, caused by the locating hole not being at right angles to the pin or by the pushing force not being parallel to the pin axis, is minimized by the ball-end form (see illustration 1 for K0351 Form B)

KIPP Locating pins with flattened ball-end Form C

Order No. tool steel	Order No. stainless steel	A	B	C	D	E	F	G	H	J	K
K0350.052	K0350.5052	5	5	5	6	5	2	M2,5	4,5	R 1	1,5
K0350.062	K0350.5062	6	6	6	8	6	2	M3	5	R 1	1,8
K0350.082	K0350.5082	8	8	8	10	8	2	M3	6	R 2	1,9
K0350.102	K0350.5102	10	10	10	13	10	2,5	M3	6	R 2,5	2,5
K0350.122	K0350.5122	12	12	12	15	12	3	M4	8	R 3	2,5
K0350.142	K0350.5142	14	14	14	17	14	3,5	M4	8	R 3,5	3,9
K0350.162	K0350.5162	16	16	16	20	16	4	M5	10	R 4	4,3
K0350.202	K0350.5202	20	20	20	25	20	5	M5	10	R 5	5
K0350.252	-	25	25	25	25	25	6	M5	10	R 6	5,6
K0350.302	-	30	30	30	30	30	8	M6	12	R 8	8,8
K0350.402	-	40	40	40	40	40	10	M6	12	R 10	12,8
K0350.502	-	50	50	50	50	50	12	M6	12	R 12	16,7

Locating pins

with ball-end Form B

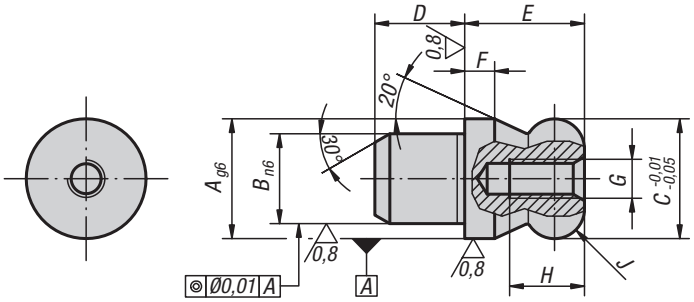

Material:
Tool steel or 1.4305 stainless steel.

Version:
Steel hardened and ground.
Stainless steel ground and kolsterised.

Sample order:
K0351.20

Note:
Ball end locating pins are specially designed to ease the locating process. The tendency to jam, caused by the locating hole not being at right angles to the pin or by the pushing force not being parallel to the pin axis, is minimized by the ball-end form (see illustration).

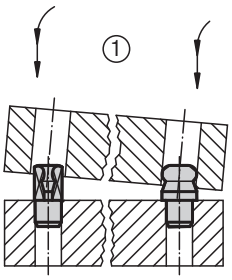

KIPP Locating pins with ball-end Form B

Order No. tool steel	Order No. stainless steel	A	B	C	D	E	F	G	H	J
K0351.06	**K0351.506**	6	4	6	4	6	2	M2,5	4,5	R 1
K0351.08	**K0351.508**	8	6	8	6	8	2	M3	6	R 2
K0351.10	**K0351.510**	10	7	10	7	10	2,5	M3	6	R 2,5
K0351.12	**K0351.512**	12	8	12	8	12	3	M4	8	R 3
K0351.14	**K0351.514**	14	10	14	10	14	3,5	M4	8	R 3,5
K0351.16	**K0351.516**	16	12	16	12	16	4	M5	10	R 4
K0351.20	**K0351.520**	20	14	20	14	20	5	M5	10	R 5
K0351.22	-	22	16	22	16	22	5,5	M5	10	R 5,5
K0351.25	-	25	18	25	18	25	6	M5	10	R 6

Locating pins

with flattened ball-end Form D

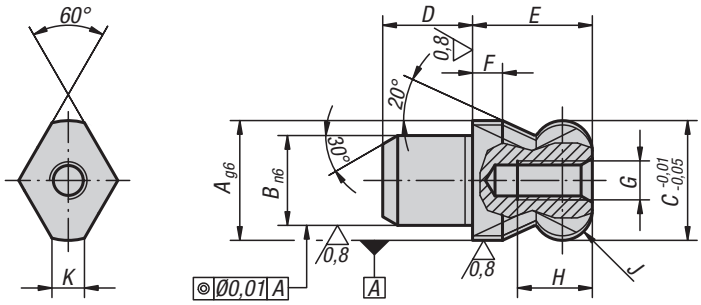

Material:
Tool steel or 1.4305 stainless steel.

Version:
Steel hardened and ground.
Stainless steel ground and kolsterised.

Sample order:
K0351.162

Note:
Ball end locating pins are specially designed to ease the locating process. The tendency to jam, caused by the locating hole not being at right angles to the pin or by the pushing force not being parallel to the pin axis, is minimized by the ball-end form (see illustration 1 for K0351 Form B)

KIPP Locating pins with flattened ball-end Form D

Order No. tool steel	Order No. stainless steel	A	B	C	D	E	F	G	H	J	K
K0351.062	K0351.5062	6	4	6	4	6	2	M2,5	4,5	R 1	1,7
K0351.082	K0351.5082	8	6	8	6	8	2	M3	6	R 2	2
K0351.102	K0351.5102	10	7	10	7	10	2,5	M3	6	R 2,5	2,5
K0351.122	K0351.5122	12	8	12	8	12	3	M4	8	R 3	2,5
K0351.142	K0351.5142	14	10	14	10	14	3,5	M4	8	R 3,5	3,76
K0351.162	K0351.5162	16	12	16	12	16	4	M5	10	R 4	4,3
K0351.202	K0351.5202	20	14	20	14	20	5	M5	10	R 5	5
K0351.222	-	22	16	22	16	22	5,5	M5	10	R 5,5	5
K0351.252	-	25	18	25	18	25	6	M5	10	R 6	5,6

K0352

Positioning pins

cylindrical, ground

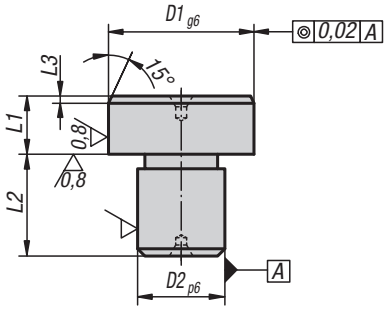

Material:
Tool steel.

Version:
Hardened and ground.

Sample order:
K0352.08

Note:
Top face with centrebore.

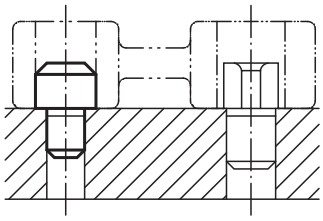

KIPP Cylindrical positioning pins, ground

Order No.	D1	D2	L1	L2	L3
K0352.05	8	5	8	8	2
K0352.07	10	7	8	8	2
K0352.08	12	8	8	10	2
K0352.081	14	8	8	10	3
K0352.09	16	9	8	12	3
K0352.12	18	12	8	12	3
K0352.121	20	12	8	14	3
K0352.14	22	14	8	14	3
K0352.16	25	16	8	16	3

K0353

Positioning pins cylindrical

not ground

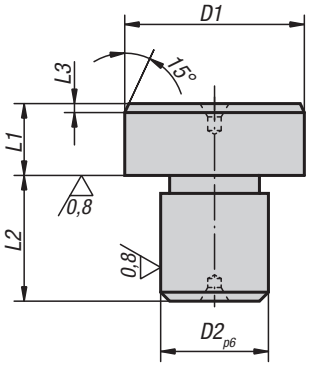

Material:
Tool steel.

Version:
Hardened.

Sample order:
K0353.05

Note:
Top face with centrebore.

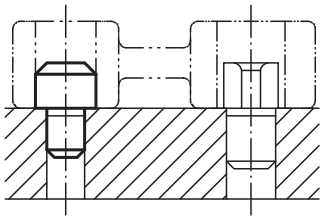

KIPP Cylindrical positioning pins, not ground

Order No.	D1	D2	L1	L2	L3
K0353.05	8,5	5	8	8	2
K0353.07	10,5	7	8	8	2
K0353.08	12,5	8	8	10	2
K0353.081	14,5	8	8	10	3
K0353.09	16,5	9	8	12	3
K0353.12	18,5	12	8	12	3
K0353.121	20,5	12	8	14	3
K0353.14	22,5	14	8	14	3
K0353.16	25,5	16	8	16	3

K0354

Positioning pins

free-milled, ground

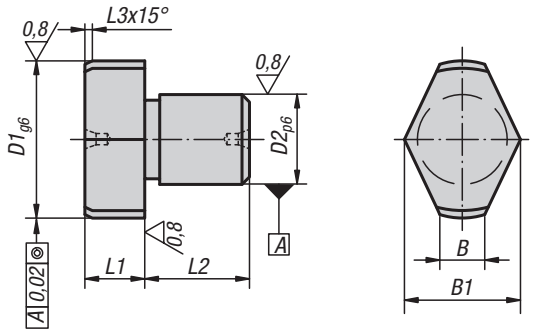

Material:
Tool steel.

Version:
Hardened and ground.

Sample order:
K0354.08

Note:
Top face with centrebore.

KIPP Positioning pins, free-milled, ground

Order No.	D1	D2	L1	L2	L3	B	B1
K0354.05	8	5	8	8	2	2	6,6
K0354.07	10	7	8	8	2	3	8,6
K0354.08	12	8	8	10	2	3	9,8
K0354.081	14	8	8	10	3	3,5	11,2
K0354.09	16	9	8	12	3	4	13,2
K0354.12	18	12	8	12	3	4,5	14,7
K0354.121	20	12	8	14	3	5	16,6
K0354.14	22	14	8	14	3	5,6	18
K0354.16	25	16	8	16	3	6	19,8

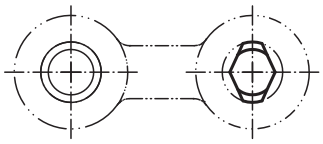

K0355

Positioning pins free-milled

not ground

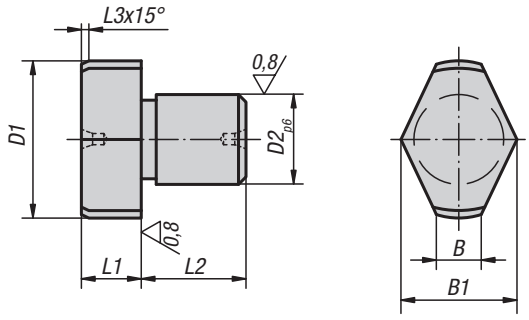

Material:
Tool steel.

Version:
Hardened.

Sample order:
K0355.05

Note:
Top face with centrebore.

KIPP Positioning pins, free-milled, not ground

Order No.	D1	D2	L1	L2	L3	B	B1
K0355.05	8,5	5	8	8	2	2	6,6
K0355.07	10,5	7	8	8	2	3	8,6
K0355.08	12,5	8	8	10	2	3	9,8
K0355.081	14,5	8	8	10	3	3,5	11,2
K0355.09	16,5	9	8	12	3	4	13,2
K0355.12	18,5	12	8	12	3	4,5	14,7
K0355.121	20,5	12	8	14	3	5	16,6
K0355.14	22,5	14	8	14	3	5,6	18
K0355.16	25,5	16	8	16	3	6	19,8

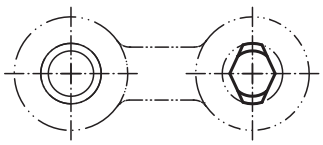

Locating pins expanding

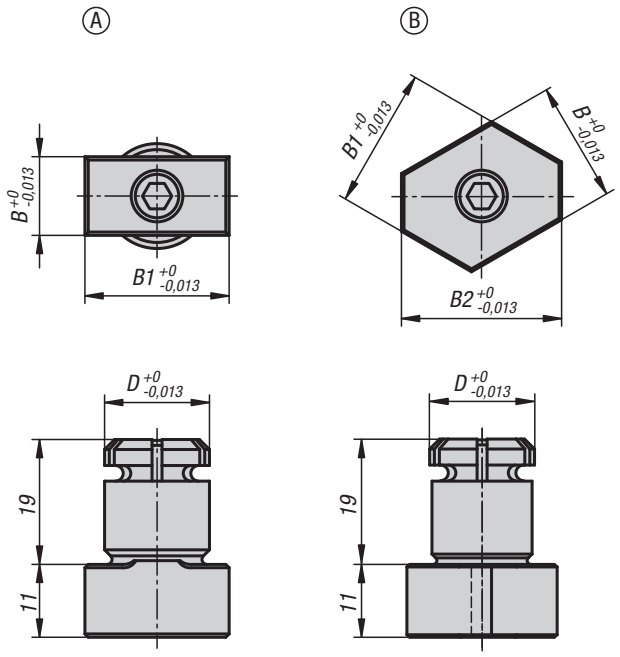

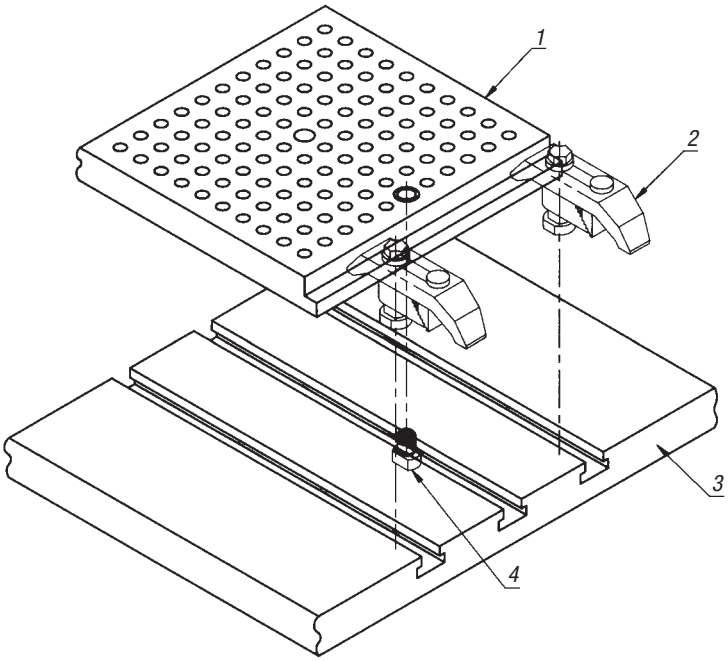

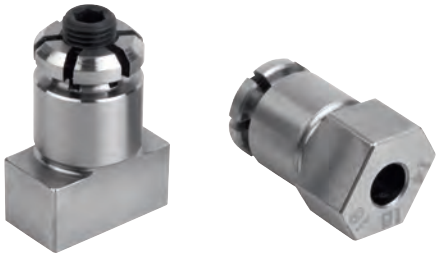

Material:
Carbon steel.

Version:
Tempered and black oxidised.
Locating diameter and guide faces ground.

Sample order:
K0356.1610

Note:
These expanding locating pins enable e.g. tooling plates to be positioned in the T-slots of machine tables (see illustration).
The plates to be positioned must have two holes matching the expanding pin diameter.
The expansion screw has a broached through hexagonal hole allowing the pin to be tightened or loosened from two sides.

Drawing reference:
1) tooling plate
2) clamp straps
3) machine table
4) expanding locating pin

KIPP Locating pins, expanding

Order No.	Form	D	B	B1	B2	Recommended Ø
K0356.1610	A	16	10	20	-	16,01 ±0,01
K0356.1612	A	16	12	22	-	16,01 ±0,01
K0356.1614	B	16	14	16	18	16,01 ±0,01
K0356.2024	B	20	24	28	32	20,01 ±0,01

Rest pads

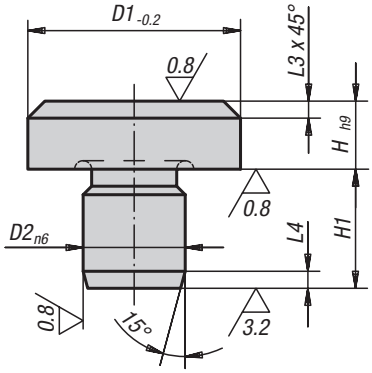

Material:
Tool steel.

Version:
Hardened and ground.
Top face without centerbore.

Sample order:
K0292.041

Note:
If more than one rest pad is used, the support height can be reground. Rest pads can also be used as feet for jigs and fixtures.

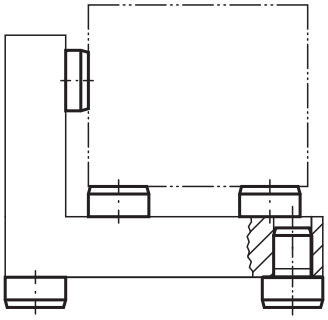

KIPP Rest pads

Order No.	D1	D2	H	H1	L3	L4
K0292.041	6	4	2,5	6,5	0,7	1,2
K0292.042	6	4	4,5	8,5	0,7	1,2
K0292.04	6	4	5	6	0,7	1,2
K0292.061	10	6	4,5	8,5	0,9	1,5
K0292.06	10	6	8	8,5	0,9	1,5
K0292.08	16	8	5	10	2	2
K0292.081	16	8	13	10	2	2
K0292.10	20	10	6	12	2	2
K0292.101	20	10	12	12	2	2
K0292.12	25	12	8	14	2	2
K0292.122	25	12	20	14	2	2
K0292.123	25	12	30	14	2	2
K0292.16	30	16	25	20	2,5	2,5
K0292.164	30	16	40	20	2,5	2,5
K0292.165	30	16	50	20	2,5	2,5
K0292.166	30	16	65	20	2,5	2,5
K0292.20	30	20	80	20	2,5	2,5
K0292.201	30	20	100	20	2,5	2,5
K0292.202	40	20	13	20	3,2	3,2
K0292.203	40	20	32	20	3,2	3,2

Locating pins and rest pads

DIN 6321 (Issue 1973)

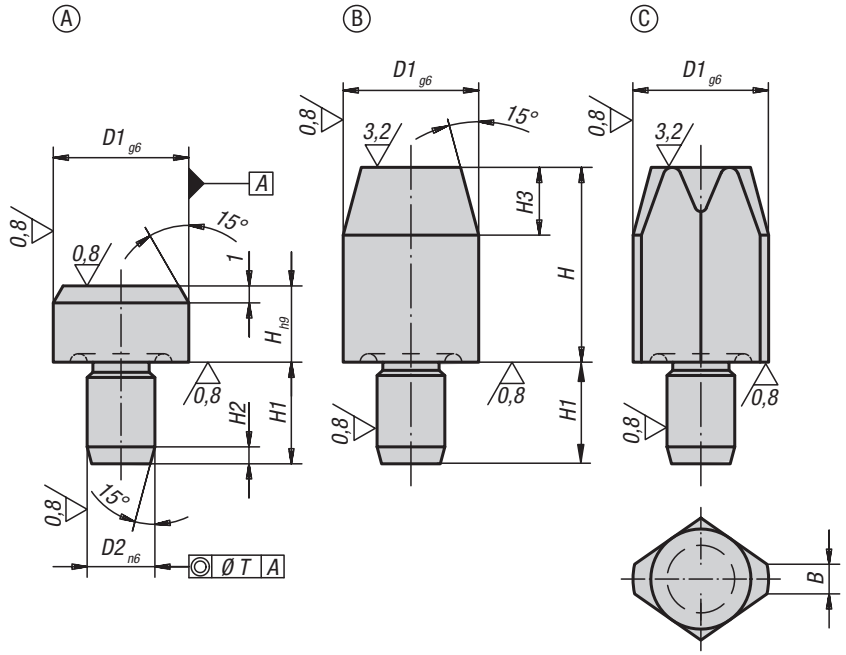

Material:
Tool steel.

Version:
Hardened and ground.

Sample order:
K0293.212

Note:
Rest pads Form A are supports for workpieces and fixtures.
Locating pins Form B are for positioning workpieces and fixture components in reamed holes.
The flattened Form C can be used to bridge tolerances in hole spacing or to secure the part to be positioned in one direction only.
Form A and B can also be used as hardened stops and as fixture feet.
For similar pins see K0352, K0353, K0354 and K0355.

Drawing reference:
Form A: Rest pad
Form B: Cylindrical locating pin
Form C: Flattened locating pin

For other dimensions see Form A.

KIPP Rest pads, Form A

Order No. without centre bore	D1	D2	H	H1	H2	T
K0293.106	6	4	5	6	1,2	0,02
K0293.110	10	6	6	9	1,6	0,02
K0293.116	16	8	8	12	2	0,04
K0293.125	25	12	10	18	2,5	0,04

KIPP Locating pin cylindrical, Form B

Order No. short	Order No. long	D1	D2	H	H1	H2	H3	T
K0293.206	**K0293.306**	6	4	7/12	6	1,2	4	0,02
K0293.208	**K0293.308**	8	6	10/16	9	1,6	6	0,02
K0293.210	**K0293.310**	10	6	10/18	9	1,6	6	0,02
K0293.212	**K0293.312**	12	6	10/18	9	1,6	6	0,02
K0293.216	**K0293.316**	16	8	13/22	12	2	8	0,04
K0293.220	**K0293.320**	20	12	15/25	18	2	9	0,04
K0293.225	**K0293.325**	25	12	15/25	18	2,5	9	0,04

KIPP Locating pin rhombic, Form C

Order No. short	Order No. long	B	D1	D2	H	H1	H2	H3	T
K0293.406	**K0293.506**	1	6	4	7/12	6	1,2	4	0,02
K0293.408	**K0293.508**	1,6	8	6	10/16	9	1,6	6	0,02
K0293.410	**K0293.510**	2,5	10	6	10/18	9	1,6	6	0,02
K0293.412	**K0293.512**	2,5	12	6	10/18	9	1,6	6	0,02
K0293.416	**K0293.516**	3,5	16	8	13/22	12	2	8	0,04
K0293.420	**K0293.520**	5	20	12	15/25	18	2	9	0,04
K0293.425	**K0293.525**	5	25	12	15/25	18	2,5	9	0,04

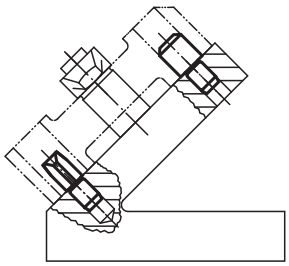

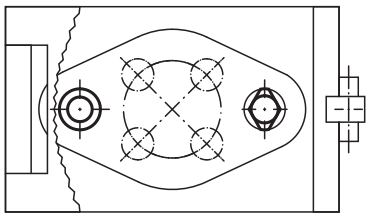

Locating pins

with internal thread

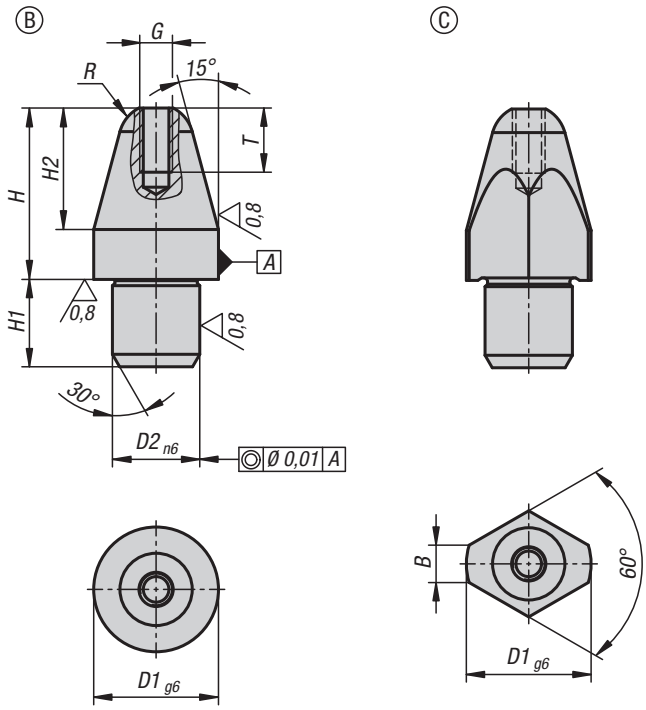

Material:
Steel.

Version:
Hardened and ground (HRC 60 ±2).

Sample order:
K1094.208

Note:
Locating pins are specially designed to ease the locating process. When used in conjunction with the hardened locating bushes K1095, they allow for a rapid, precise and low-wear workpiece exchange.

Drawing reference:
Form B: cylindrical pin
Form C: rhomboid pin

KIPP Locating pins, short

Order No. Form B	Order No. Form C	Version 1	D1	D2	G	H	H1	H2	R	B	T
K1094.208	**K1094.408**	short	8	6	M2,5	11,4	6	7,4	2,5	-/2,5	5
K1094.210	**K1094.410**	short	10	7	M2,5	13,7	7	9,7	3	-/3,0	5
K1094.212	**K1094.412**	short	12	8	M3	16	8	12	3,5	-/3,5	6
K1094.216	**K1094.416**	short	16	12	M4	20	12	15	5	-/5	8
K1094.220	**K1094.420**	short	20	14	M5	25,5	14	19,5	6	-/6	10

KIPP Locating pins, long

Order No. Form B	Order No. Form C	Version 1	D1	D2	G	H	H1	H2	R	B	T
K1094.308	**K1094.508**	long	8	6	M2,5	17,4	6	7,4	2,5	-/2,5	5
K1094.310	**K1094.510**	long	10	7	M2,5	21,7	7	9,7	3	-/3,0	5
K1094.312	**K1094.512**	long	12	8	M3	24	8	12	3,5	-/3,5	6
K1094.316	**K1094.516**	long	16	12	M4	29	12	15	5	-/5	8
K1094.320	**K1094.520**	long	20	14	M5	35,5	14	19,5	6	-/6	10

Locating bushes

for locating pins

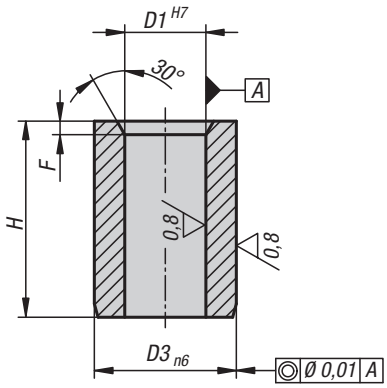

Material:
Steel.

Version:
Hardened and ground (HRC 60 ±2).

Sample order:
K1095.0812

KIPP Locating bushes for locating pins

Order No.	Version 1	D1	D3	F	H
K1095.0812	short	8	12	1,2	12
K1095.1014	short	10	15	1,5	14
K1095.1216	short	12	18	1,5	16
K1095.1620	short	16	26	1,5	20
K1095.2026	short	20	30	2,5	26
K1095.0818	long	8	12	1,2	18
K1095.1022	long	10	15	1,5	22
K1095.1224	long	12	18	1,5	24
K1095.1630	long	16	26	1,5	30
K1095.2036	long	20	30	2,5	36

Positioning feet

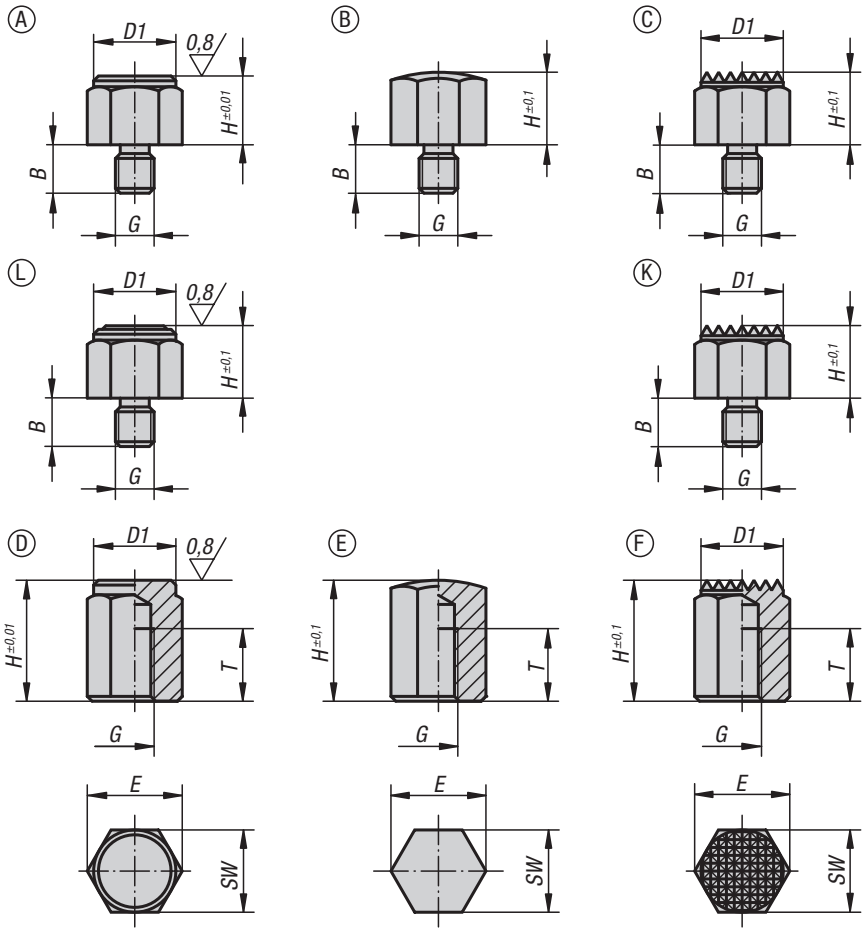

Material:
Steel.

Version:
Case-hardened and black oxidised.

Sample order:
K0298.215

Note:
Positioning feet are used as supports, stops and thrust pads for fixtures and general machine and appliance construction.

Drawing reference:
Form A: External thread and flat face
Form B: External thread and convex face
Form C: External thread and serrated face
Form K: External thread and carbide serrated face
Form L: External thread and POM insert
Form D: External thread and flat face
Form E: External thread and convex face
Form F: External thread and serrated face

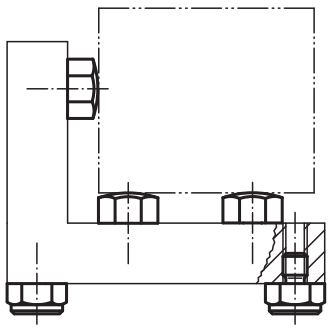

KIPP Form A, with external thread and flat face

Order No.	Form	B	D1	G	H	E	SW	Tightening torque max. Nm
K0298.108	A	8	13	M6	8	14,4	13	8,5
K0298.1104	A	10	13	M6	10	14,4	13	8,5
K0298.1081	A	10	17	M8	8	19,4	17	18
K0298.1101	A	10	17	M8	10	19,4	17	18
K0298.1103	A	12	19	M10	10	21,1	19	32
K0298.1152	A	12	19	M10	15	21,1	19	32
K0298.110	A	14	22	M12	10	25,2	22	60
K0298.115	A	14	22	M12	15	25,2	22	60
K0298.1151	A	19	30	M16	15	33	30	140
K0298.1201	A	19	30	M16	20	33	30	140

Positioning feet

KIPP Form B, with external thread and convex face

Order No.	Form	B	G	H	E	SW	Tightening torque max. Nm
K0298.208	B	8	M6	8	14,4	13	8,5
K0298.2104	B	10	M6	10	14,4	13	8,5
K0298.2081	B	10	M8	8	19,4	17	18
K0298.2101	B	10	M8	10	19,4	17	18
K0298.2103	B	12	M10	10	21,1	19	32
K0298.2152	B	12	M10	15	21,1	19	32
K0298.210	B	14	M12	10	25,2	22	60
K0298.215	B	14	M12	15	25,2	22	60
K0298.2151	B	19	M16	15	33	30	140
K0298.2201	B	19	M16	20	33	30	140

KIPP Form C, with external thread and serrated surface

Order No.	Form	B	D1	G	H	E	SW	Tightening torque max. Nm
K0298.308	C	8	13	M6	8	14,4	13	8,5
K0298.3102	C	10	13	M6	10	14,4	13	8,5
K0298.3081	C	10	17	M8	8	19,4	17	18
K0298.3101	C	10	17	M8	10	19,4	17	18
K0298.3103	C	12	19	M10	10	21,1	19	32
K0298.3152	C	12	19	M10	15	21,1	19	32
K0298.310	C	14	22	M12	10	25,2	22	60
K0298.315	C	14	22	M12	15	25,2	22	60
K0298.3151	C	19	30	M16	15	33	30	140
K0298.3201	C	19	30	M16	20	33	30	140

KIPP Form K, with external thread and carbide serrations

Order No.	Form	B	D1	G	H	E	SW	Tightening torque max. Nm
K0298.7101	K	10	17	M8	10	19,4	17	18
K0298.710	K	14	22	M12	10	25,2	22	60
K0298.715	K	14	22	M12	15	25,2	22	60
K0298.7151	K	19	30	M16	15	33	30	140
K0298.7201	K	19	30	M16	20	33	30	140

KIPP Form L, with external thread and POM insert

Order No.	Form	B	D1	G	H	E	SW	Tightening torque max. Nm
K0298.8101	L	10	17	M8	10	19,4	17	18
K0298.810	L	14	22	M12	10	25,2	22	60
K0298.815	L	14	22	M12	15	25,2	22	60
K0298.8151	L	19	30	M16	15	33	30	140
K0298.8201	L	19	30	M16	20	33	30	140

Positioning feet

KIPP Form D, with internal thread and flat face

Order No.	Form	D1	G	H	T	E	SW
K0298.410	D	13	M6	10	6	14,4	13
K0298.4151	D	13	M6	15	10	14,4	13
K0298.4101	D	17	M8	10	6	19,4	17
K0298.415	D	17	M8	15	6	19,4	17
K0298.4251	D	17	M8	25	16	19,4	17
K0298.4201	D	19	M10	20	10	21,1	19
K0298.4401	D	19	M10	40	15	21,1	19
K0298.420	D	22	M12	20	10	25,2	22
K0298.425	D	22	M12	25	15	25,2	22
K0298.430	D	22	M12	30	20	25,2	22
K0298.440	D	22	M12	40	25	25,2	22
K0298.450	D	22	M12	50	25	25,2	22
K0298.4301	D	30	M16	30	20	33	30
K0298.4501	D	30	M16	50	25	33	30

KIPP Form E with internal thread and spherical face

Order No.	Form	G	H	T	E	SW
K0298.510	E	M6	10	6	14,4	13
K0298.5151	E	M6	15	10	14,4	13
K0298.5101	E	M8	10	6	19,4	17
K0298.515	E	M8	15	6	19,4	17
K0298.5251	E	M8	25	16	19,4	17
K0298.5201	E	M10	20	10	21,1	19
K0298.5401	E	M10	40	15	21,1	19
K0298.520	E	M12	20	10	25,2	22
K0298.525	E	M12	25	15	25,2	22
K0298.530	E	M12	30	20	25,2	22
K0298.540	E	M12	40	25	25,2	22
K0298.550	E	M12	50	25	25,2	22
K0298.5301	E	M16	30	20	33	30
K0298.5501	E	M16	50	25	33	30

KIPP Form F, with internal thread and serrated face

Order No.	Form	D1	G	H	T	E	SW
K0298.610	F	13	M6	10	6	14,4	13
K0298.6151	F	13	M6	15	10	14,4	13
K0298.6101	F	17	M8	10	6	19,4	17
K0298.615	F	17	M8	15	6	19,4	17
K0298.6251	F	17	M8	25	16	19,4	17
K0298.6201	F	19	M10	20	10	21,1	19
K0298.6401	F	19	M10	40	15	21,1	19
K0298.620	F	22	M12	20	10	25,2	22
K0298.625	F	22	M12	25	15	25,2	22
K0298.630	F	22	M12	30	20	25,2	22
K0298.640	F	22	M12	40	25	25,2	22
K0298.650	F	22	M12	50	25	25,2	22
K0298.6301	F	30	M16	30	20	33	30
K0298.6501	F	30	M16	50	25	33	30

Positioning feet

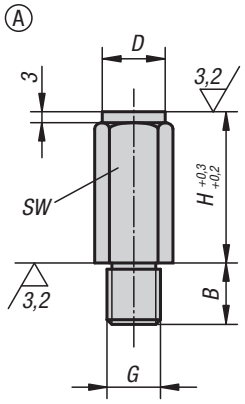

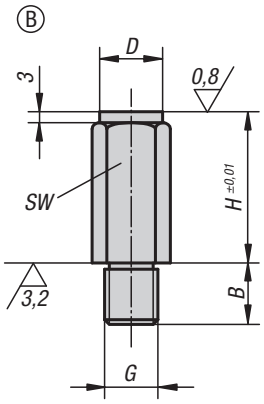

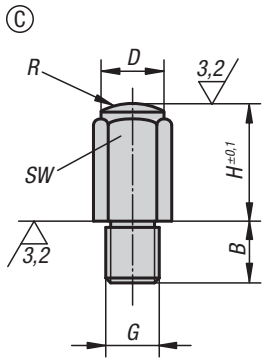

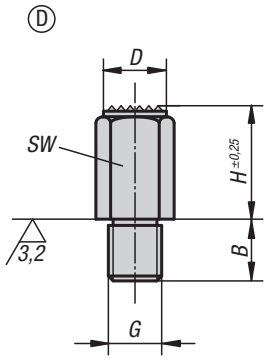

Material:
Body high carbon steel.

Version:
Body tempered and black oxidised.
Contact faces case-hardened.

Sample order:
K0299.106010

Note:
These positioning feet are used as supports for rough and machined parts. They can also be used as stops and thrust pads in fixtures and toolmaking.

Drawing reference:
Form A: Flat face hardened
Form B: Flat face hardened and ground
Form C: Spherical face hardened
Form D: Serrated face tempered

KIPP Positioning feet

Order No. Form A	Order No. Form B	Order No. Form C	Order No. Form D	B	D	G	H	R	SW
K0299.106010	K0299.206010	K0299.306010	K0299.406010	11	10	M6	10	-/-/15/-	10
K0299.106020	K0299.206020	K0299.306020	K0299.406020	11	10	M6	20	-/-/15/-	10
K0299.108010	K0299.208010	K0299.308010	-	13	13	M8	10	-/-/20	13
K0299.108015	K0299.208015	K0299.308015	K0299.408015	13	13	M8	15	-/-/20/-	13
K0299.108030	K0299.208030	K0299.308030	K0299.408030	13	13	M8	30	-/-/20/-	13
K0299.110010	K0299.210010	K0299.310010	-	16	17	M10	10	-/-/30	17
K0299.110020	K0299.210020	K0299.310020	K0299.410020	16	17	M10	20	-/-/30/-	17
K0299.110040	K0299.210040	K0299.310040	K0299.410040	16	17	M10	40	-/-/30/-	17
K0299.112010	K0299.212010	K0299.312010	-	20	19	M12	10	-/-/40	19
K0299.112025	K0299.212025	K0299.312025	K0299.412025	20	19	M12	25	-/-/35/-	19
K0299.112050	K0299.212050	K0299.312050	K0299.412050	20	19	M12	50	-/-/35/-	19
K0299.116015	K0299.216015	K0299.316015	-	24	27	M16	15	-/-/50	27
K0299.116030	K0299.216030	K0299.316030	K0299.416030	24	27	M16	30	-/-/50/-	27
K0299.116060	K0299.216060	K0299.316060	K0299.416060	24	27	M16	60	-/-/50/-	27
K0299.120040	K0299.220040	K0299.320040	K0299.420040	29	32	M20	40	-/-/60/-	32
K0299.120080	K0299.220080	K0299.320080	K0299.420080	29	32	M20	80	-/-/60/-	32

Fixture feet

with external thread

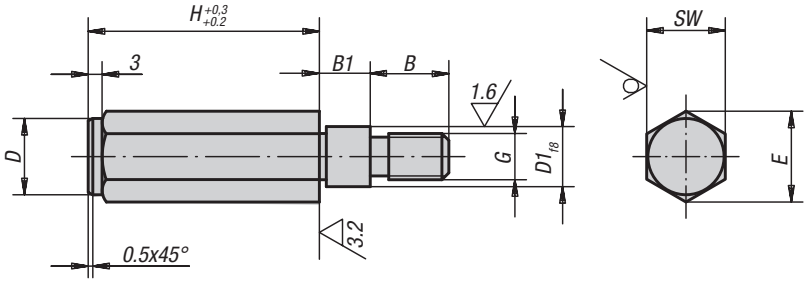

Material:
Carbon steel 1.1181.

Version:
Black oxidised.

Sample order:
K0300.10X75 (include height H.)

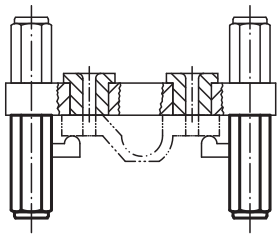

KIPP Fixture feet with external thread

Order No.	B	B1	D	D1	G	H	E	SW
K0300.10X	17	11	16,5	11	M10	50/75/100	19,5	17
K0300.12X	17	18	18,5	13	M12	50/75/100/125	21,5	19

Application of a drilling jig

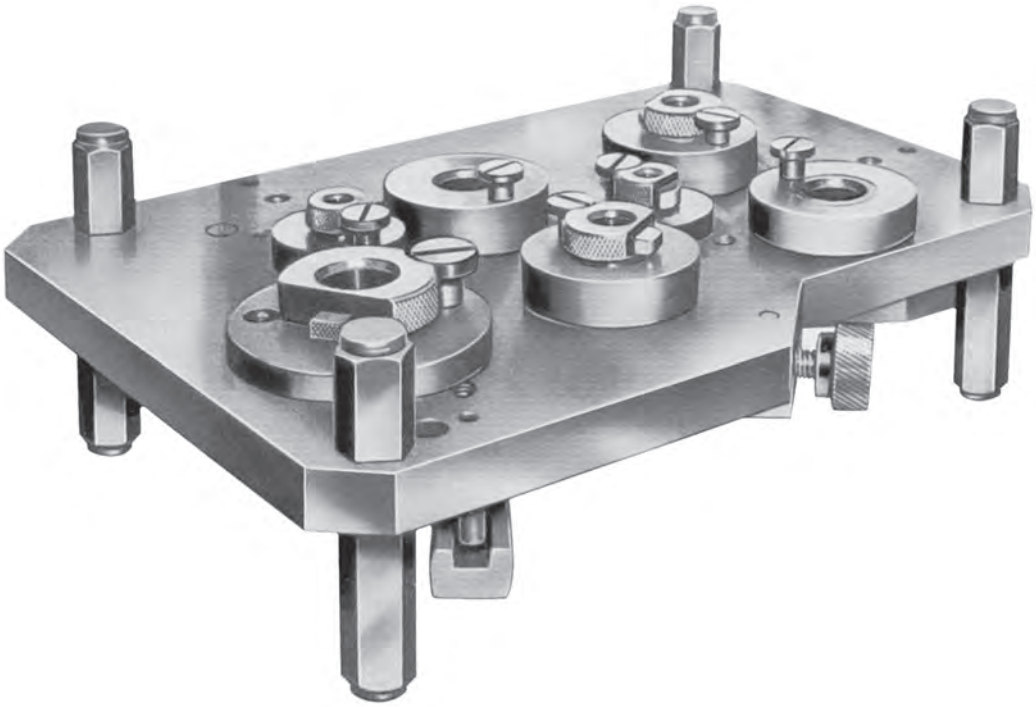

Fixture feet

with internal thread

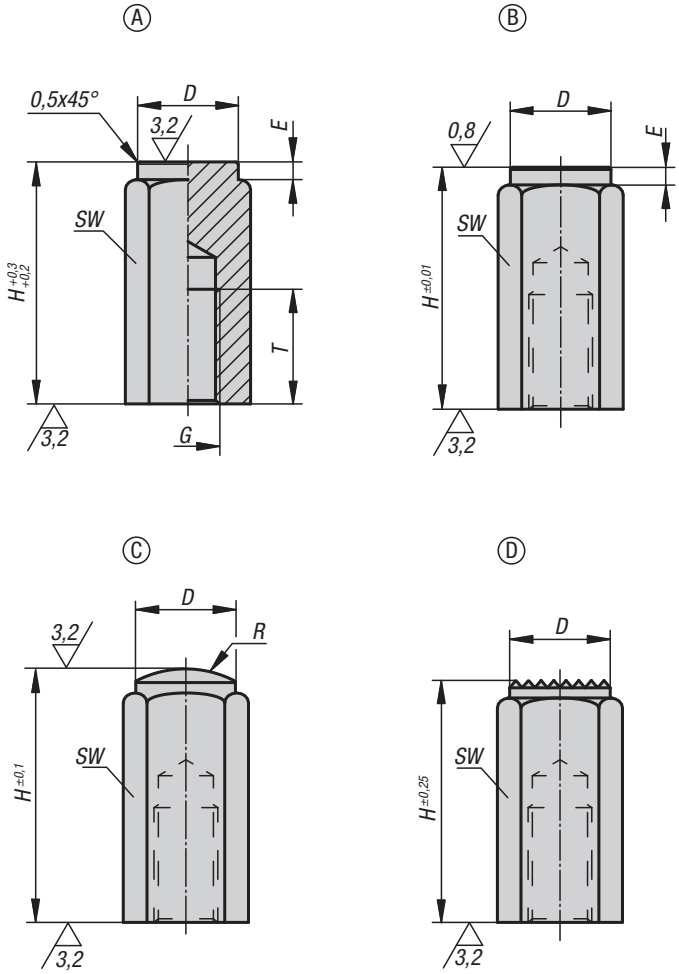

Material:
Body high carbon steel.

Version:
Body tempered and black oxidised.
Contact faces case-hardened.

Sample order:
K0301.106X20

Note:
Fixture feet with internal thread are used as supports for fixtures or rough or machined workpieces. They can also be used as stops or thust pads in fixtures and toolmaking.

Drawing reference:
Form A: hardened face
Form B: face hardened and ground
Form C: hardened spherical surface
Form D: tempered serrated surface

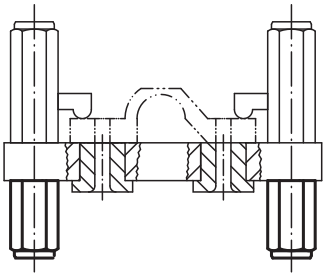

KIPP Fixture feet with internal thread

Order No. Form A	Order No. Form B	Order No. Form C	Order No. Form D	D	E	G	H	R	T	SW
K0301.106X20	K0301.206X20	K0301.306X20	K0301.406X20	9,5	2/2/-/-	M6	20	-/-/15/-	12	10
K0301.106X40	K0301.206X40	K0301.306X40	K0301.406X40	9,5	2/2/-/-	M6	40	-/-/15/-	12	10
K0301.110X32	K0301.210X32	K0301.310X32	K0301.410X32	16,5	3/3/-/-	M10	32	-/-/30/-	18	17
K0301.110X63	K0301.210X63	K0301.310X63	K0301.410X63	16,5	3/3/-/-	M10	63	-/-/30/-	18	17
K0301.112X32	K0301.212X32	K0301.312X32	K0301.412X32	18,5	3/3/-/-	M12	32	-/-/35/-	18	19
K0301.112X63	K0301.212X63	K0301.312X63	K0301.412X63	18,5	3/3/-/-	M12	63	-/-/35/-	18	19
K0301.116X50	K0301.216X50	K0301.316X50	K0301.416X50	23	4/4/-/-	M16	50	-/-/40/-	24	24
K0301.116X100	K0301.216X100	K0301.316X100	K0301.416X100	23	4/4/-/-	M16	100	-/-/40/-	24	24

Extension pieces

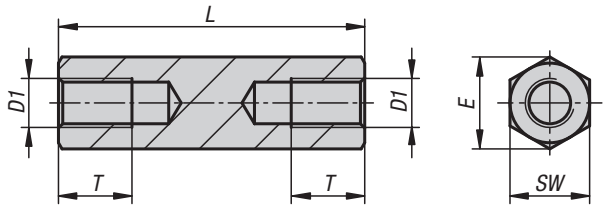

Material:
Steel 1.0718.

Version:
Trivalent blue passivated.

Sample order:
K1302.205025
(include length L e.g. 025 for L = 25 mm.)

KIPP Extension pieces

Order No.	D1	E	L	SW	T
K1302.205* **	M5	9,2	25/30/35	8	8
K1302.206* **	M6	11,5	30/35/40/50/60	10	9
K1302.208* **	M8	15	30/35/40/50/60/90	13	12
K1302.210* **	M10	18,5	40/45/55/65/95/115	16	15
K1302.212* **	M12	20,8	40/45/55/65/95/115	18	18

Rest pads

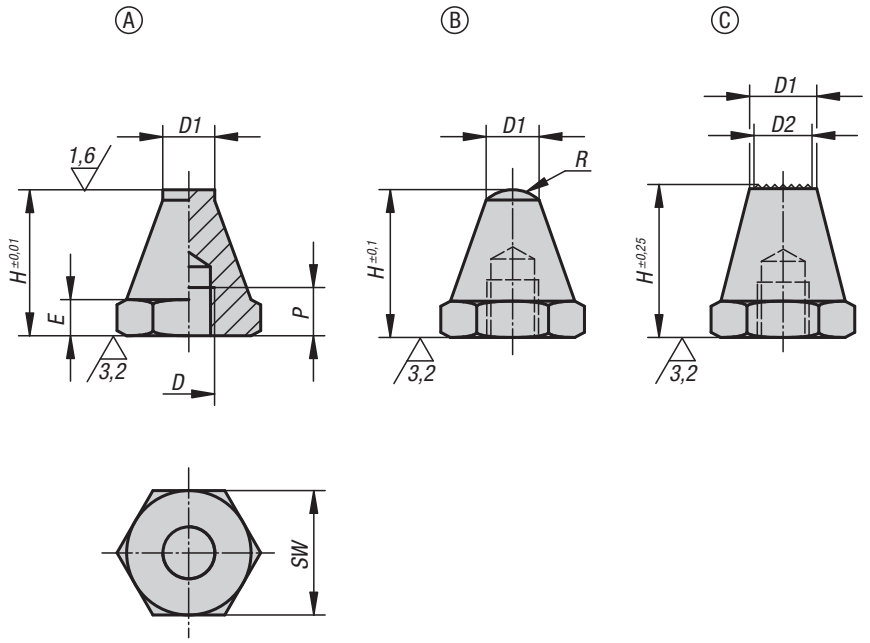

Material:
Body high carbon steel.

Version:
Body tempered and black oxidised.

Sample order:
K0294.106012

Note:
Rest pads are for supporting machined and non-machined parts. They can also be used as stops and thrust pads in fixtures and toolmaking.
Studs or grub screws can be screwed and glued into the tapped hole D to make a rest pad with external thread.

Drawing reference:
Form A: flat face
Form B: ball end
Form C: diamond grip

KIPP Rest pads

Order No. Form A	Order No. Form B	Order No. Form C	D	D1	D2	E	H	P	R	SW
K0294.106012	K0294.206012	K0294.306012	M6	6	-/-/5	3	12,5	4	-/5/-	11
K0294.106025	K0294.206025	K0294.306025	M6	6	-/-/5	3	25	7	-/5/-	11
K0294.108015	K0294.208015	K0294.308015	M8	8	-/-/6	4	15	6	-/8,5/-	13
K0294.108030	K0294.208030	K0294.308030	M8	8	-/-/6	4	30	9	-/8,5/-	13
K0294.110020	K0294.210020	K0294.310020	M10	10	-/-/8	5	20	9	-/9/-	17
K0294.110040	K0294.210040	K0294.310040	M10	10	-/-/8	5	40	13	-/9/-	17
K0294.112025	K0294.212025	K0294.312025	M12	12	-/-/9,5	6	25	11	-/12,75/-	19
K0294.112050	K0294.212050	K0294.312050	M12	12	-/-/9,5	6	50	16	-/12,75/-	19
K0294.116030	K0294.216030	K0294.316030	M16	16	-/-/13	8	30	12	-/17/-	24
K0294.116060	K0294.216060	K0294.316060	M16	16	-/-/13	8	60	20	-/17/-	24

Rest pads

with positioning pin

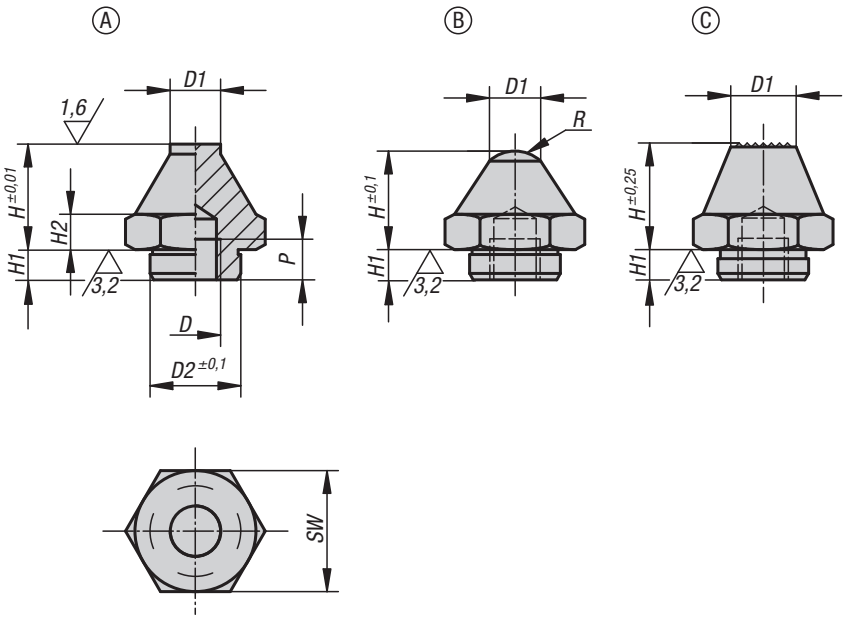

Material:
Body high carbon steel.

Version:
Body tempered and black oxidised.
Contact faces case-hardened.

Sample order:
K0295.106012

Note:
Rest pads are for supporting machined and unmachined parts. They can also be used as stops and thrust pads in fixtures and toolmaking. Studs or grub screws can be screwed and glued into the tapped hole D to make a support with external thread.

Drawing reference:
Form A: flat face
Form B: ball end
Form C: diamond grip

KIPP Rest pads with positioning pin

Order No.	Form	D	D1	D2	H	H1	H2	P	R	SW
K0295.106012	A	M6	7	11,9	12,5	4	4	6	-	17
K0295.106025	A	M6	7	11,9	25	4	4	6	-	17
K0295.110020	A	M10	10	17,8	20	5	7	10	-	24
K0295.110040	A	M10	10	17,8	40	6	7	10	-	24
K0295.116030	A	M16	20	25,8	30	10	13	16	-	41
K0295.116060	A	M16	20	25,8	60	10	13	16	-	41
K0295.206012	B	M6	7	11,9	12,5	4	4	6	6	17
K0295.206025	B	M6	7	11,9	25	4	4	6	6	17
K0295.210020	B	M10	10	17,8	20	5	7	10	7,5	24
K0295.210040	B	M10	10	17,8	40	6	7	10	7,5	24
K0295.216030	B	M16	20	25,8	30	10	13	16	26	41
K0295.216060	B	M16	20	25,8	60	10	13	16	26	41
K0295.310020	C	M10	15	17,8	20	5	7	10	-	24
K0295.310040	C	M10	10	17,8	40	6	7	10	-	24
K0295.316030	C	M16	20	25,8	30	10	13	16	-	41
K0295.316060	C	M16	20	25,8	60	10	13	16	-	41

Feet

with threaded pin, DIN 6320 (edition 1971)

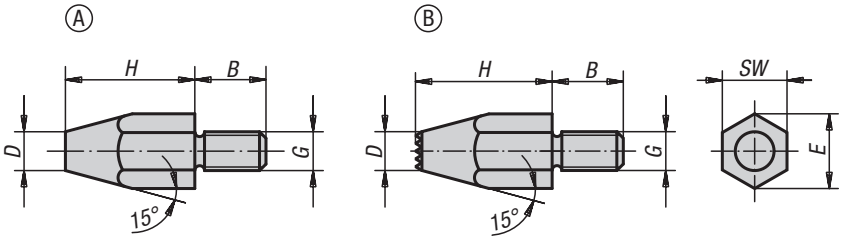

Material:
Carbon steel 1.1172.

Version:
Black oxidised.

Sample order:
K0296.10

Note:
The rest pads K0292 and K0293 can also be used as feet.

Drawing reference:
Form A: Smooth face
Form B: Carbide tips

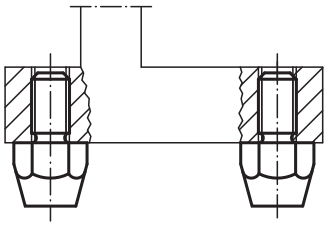

KIPP Feet with threaded pin, DIN 6320 (edition 1971)

Order No.	Form	D	G	H	B	E	SW
K0296.06	A	8	M6	10	11	11,5	10
K0296.061	A	6	M6	20	11	11,5	10
K0296.08	A	10	M8	15	13	15	13
K0296.081	A	9	M8	30	13	15	13
K0296.10	A	13	M10	20	16	19,6	17
K0296.101	A	13	M10	40	16	19,6	17
K0296.12	A	15	M12	25	20	21,9	19
K0296.121	A	15	M12	50	20	21,9	19
K0296.083	B	11,5	M8	15	13	15	13
K0296.123	B	15	M12	25	20	21,9	19

Rest pads

pin form, internal thread

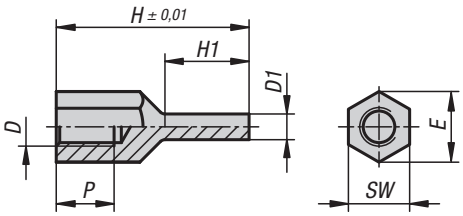

Material:
Carbon steel.

Version:
Tempered, black oxidised.
Seating face inductively hardened and ground.

Sample order:
K1105.2060420

Note:
The rest pads can be used both as a stable and precise support and as a stop.
The pin form of the rest pad also allows it to be used with components with constricted support points.

KIPP Rest pads, pin form with internal thread

Order No.	D	D1	E	H	H1	P	SW
K1105.2060420	M6	4	11	20	8,5	6	10
K1105.2060430	M6	4	11	30	13,5	9	10
K1105.2080430	M8	4	14,4	30	13	10	13
K1105.2080440	M8	4	14,4	40	18	14	13
K1105.2080630	M8	6	14,4	30	13	10	13
K1105.2080640	M8	6	14,4	40	18	14	13
K1105.2100630	M10	6	19	30	12	10	17
K1105.2100650	M10	6	19	50	25	15	17
K1105.2100830	M10	8	19	30	12	10	17
K1105.2100850	M10	8	19	50	25	15	17
K1105.2120640	M12	6	21,2	40	18	12	19
K1105.2120660	M12	6	21,2	60	28	18	19
K1105.2120840	M12	8	21,2	40	18	12	19
K1105.2120860	M12	8	21,2	60	28	18	19

Rest pads

pin form, external thread

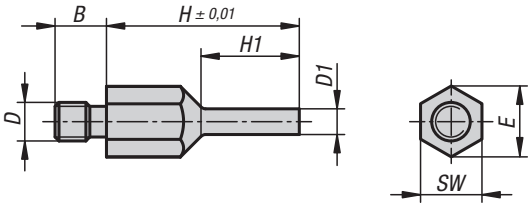

Material:
Carbon steel.

Version:
Tempered, black oxidised.
Seating face inductively hardened and ground.

Sample order:
K1105.1060420

Note:
The rest pads can be used both as a stable and precise support and as a stop.
The pin form of the rest pad also allows it to be used with components with constricted support points.

KIPP Rest pads, pin form with external thread

Order No.	B	D	D1	E	H	H1	SW
K1105.1060420	8	M6	4	11	20	10	10
K1105.1060430	8	M6	4	11	30	15	10
K1105.1080430	10	M8	4	14,4	30	15	13
K1105.1080440	10	M8	4	14,4	40	20	13
K1105.1080630	10	M8	6	14,4	30	15	13
K1105.1080640	10	M8	6	14,4	40	20	13
K1105.1100630	14	M10	6	19	30	15	17
K1105.1100650	14	M10	6	19	50	25	17
K1105.1100830	14	M10	8	19	30	15	17
K1105.1100850	14	M10	8	19	50	25	17
K1105.1120640	14	M12	6	21,2	40	20	19
K1105.1120660	14	M12	6	21,2	60	30	19
K1105.1120840	14	M12	8	21,2	40	20	19
K1105.1120860	14	M12	8	21,2	60	30	19

Locating feet

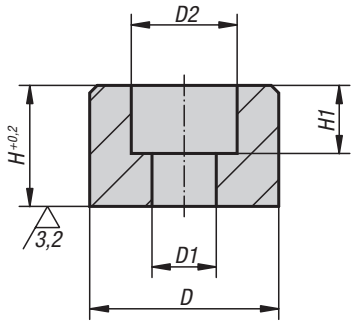

Material:
Steel 1.0718.

Version:
Hardened, black oxidised.

Sample order:
K0303.08

KIPP Locating feet

Order No.	D	D1	D2	H	H1
K0303.05	16	5,5	10	10	5,7
K0303.06	20	6,6	11	12	7
K0303.08	25	9	15	16	9
K0303.10	32	11	18	20	11
K0303.12	36	13,5	20	25	13

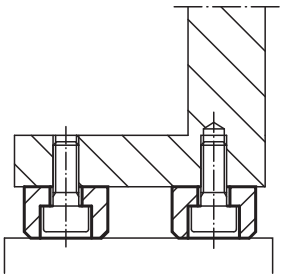

Notes

Support bolts

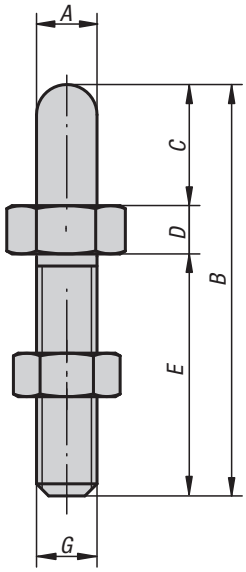

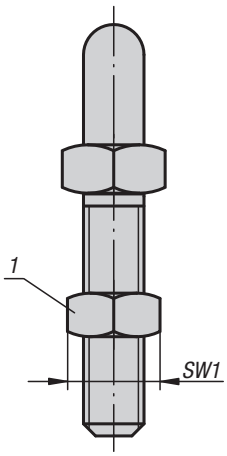

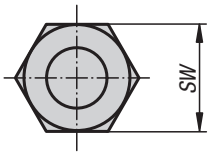

Material:
Carbon steel, tempered.

Version:
Black oxidised.

Sample order:
K0297.16016

Note:
The rounded nose also allows support bolts to be used as positioning elements for workpieces with matching holes.

The versions K0297.20020 and K0297-20040 have an octagonal collar.

Drawing reference:
1) locknut

KIPP Support bolts

Order No.	A	B	C	D	E	G	SW	SW1
K0297.06006	6	37	6	6	25	M6	13	10
K0297.06012	6	43	12	6	25	M6	13	10
K0297.08008	8	45	8	7	30	M8	13	13
K0297.08016	8	53	16	7	30	M8	13	13
K0297.10010	10	58	10	8	40	M10	17	17
K0297.10020	10	68	20	8	40	M10	17	17
K0297.12012	12	72	12	10	50	M12	19	19
K0297.12024	12	84	24	10	50	M12	19	19
K0297.16016	16	89	16	13	60	M16	24	24
K0297.16032	16	105	32	13	60	M16	24	24
K0297.20020	20	115	20	15	80	M20	36	30
K0297.20040	20	135	40	15	80	M20	36	30

K0305

Rest pads

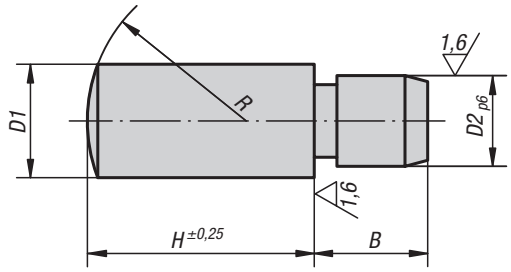

Material:
Steel 1.0301.

Version:
Case-hardened, black oxidised and ground.

Sample order:
K0305.05X8 (include length H)

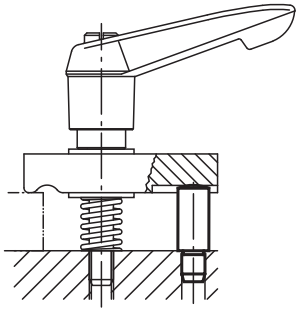

KIPP Rest pads

Order No.	H	B	D1	D2	R
K0305.05X	8/10/12/16	5	5	4	7
K0305.06X	10/12/16/20	6	6	5	8
K0305.08X	12/16/20/25	8	8	6	11
K0305.10X	16/20/25/32	10	10	8	14
K0305.12X	20/25/32/40	12	12	10	16
K0305.14X	20/25/32/40	14	14	12	20
K0305.16X	25/32/40/50	16	16	14	25
K0305.20X	25/32/40/50	20	20	16	28

K0306

Rest pads adjustable

with locknut

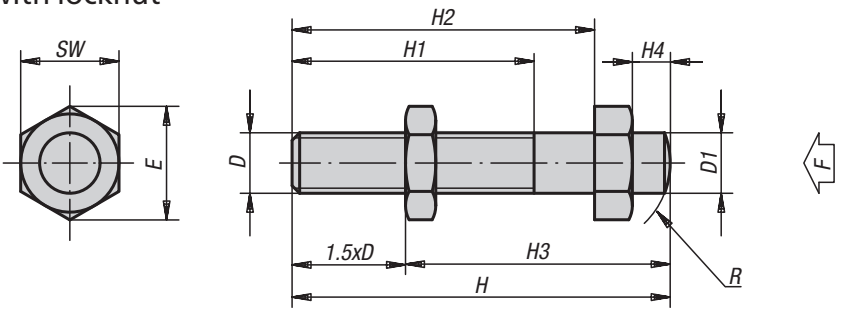

Material:
Carbon steel 1.1181.

Version:
Surface hardened, black oxidised.

Sample order:
K0306.05

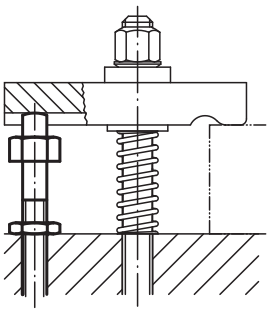

KIPP Rest pads adjustable with locknut

Order No.	D	D1	H	H1	H2	H3 min.	H3 max.	H4	E	SW	R	F ca.N
K0306.05	M5	5	50	32	40	20,5	42,5	5	11,5	10	7	1000
K0306.06	M6	6	50	32	40	21	41	5	11,5	10	8	1430
K0306.08	M8	8	50	32	40	22	38	5	15	13	11	2620
K0306.10	M10	10	52	32	40	25	37	5	19,6	17	14	4180
K0306.101	M10	10	70	32	56	42	55	6	19,6	17	14	4180
K0306.12	M12	12	70	40	56	36	52	6	21,9	19	16	6100
K0306.121	M12	12	95	50	80	51	77	6	21,9	19	16	6100
K0306.14	M14	14	100	63	80	44	79	8	25,4	22	20	8320
K0306.16	M16	16	100	63	80	45	76	8	27,7	24	25	11520
K0306.161	M16	16	120	63	100	65	96	8	27,7	24	25	11520
K0306.20	M20	20	110	70	88	50	90	10	34,6	30	28	18000

Rest pads

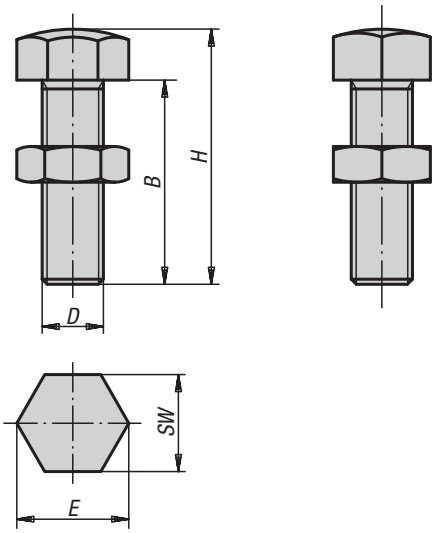

Material:
Carbon steel or brass

Version:
Tempered and black oxidised.

Sample order:
K0307.16055

KIPP Rest pads

Order No.	Main material	B	D	E	H	SW
K0307.06030	high carbon steel	25	M6	11,5	30	10
K0307.06040	high carbon steel	35	M6	11,5	40	10
K0307.06050	high carbon steel	45	M6	11,5	50	10
K0307.08036	high carbon steel	30	M8	15	36	13
K0307.08046	high carbon steel	40	M8	15	46	13
K0307.08056	high carbon steel	50	M8	15	56	13
K0307.10042	high carbon steel	35	M10	19,6	42	17
K0307.10048	high carbon steel	40	M10	19,6	48	17
K0307.10058	high carbon steel	50	M10	19,6	58	17
K0307.10068	high carbon steel	60	M10	19,6	68	17
K0307.12048	high carbon steel	42	M12	21,9	50	19
K0307.12070	high carbon steel	60	M12	21,9	70	19
K0307.12080	high carbon steel	70	M12	21,9	80	19
K0307.16055	high carbon steel	45	M16	27,7	55	24
K0307.16075	high carbon steel	65	M16	27,7	75	24
K0307.16085	high carbon steel	75	M16	27,7	85	24
K0307.12148	brass	42	M12	21,9	50	19
K0307.16155	brass	45	M16	27,7	55	24

Stop screws

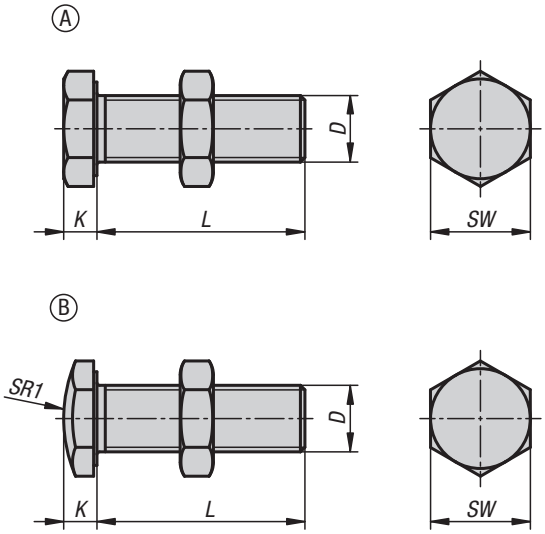

Material:
Steel grade 10.9
(M3 8.8)

Version:
Stop screw black oxidised.
Nut electro zinc-plated.

Sample order:
K1200.10820
(include length L e.g. 20 for L = 20 mm)

Note:
Size M3 stop screw only available in grade 8.8.

KIPP Stop screws

Order No.	Form	D	L	K	SW	SR1
K1200.103**	A	M3	16/25	2	5,5	-
K1200.104**	A	M4	16/25/35	2,5	7	-
K1200.105**	A	M5	16/25/35	3,5	8	-
K1200.106**	A	M6	25/35/40	3,8	10	-
K1200.108**	A	M8	12/16/20/25/30/35/40/45/50/55/65/70/85	5	13	-
K1200.110**	A	M10	35/40/50/60	6	17	-
K1200.112**	A	M12	40/60/70	7	19	-
K1200.116**	A	M16	50/60/70	9,5	24	-
K1200.203**	B	M3	16/25	2	5,5	10
K1200.204**	B	M4	16/25/35	2,5	7	10
K1200.205**	B	M5	16/25/35	3,5	8	12
K1200.206**	B	M6	25/35/40	3,8	10	15
K1200.208**	B	M8	12/16/20/25/30/35/40/45/50/55/65/70/85	5	13	20
K1200.210**	B	M10	35/40/50/60	6	17	30
K1200.212**	B	M12	40/60/70	7	19	30
K1200.216**	B	M16	50/60/70	9,5	24	35

Jack screws

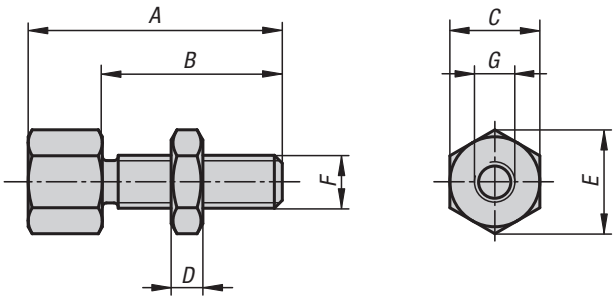

Material:
Carbon steel.

Version:
Black oxidised.

Sample order:
K0308.0803006

Note:
Various rests can be mounted on this jack screw.

Drawing reference:
1) screw rest
2) jack screw

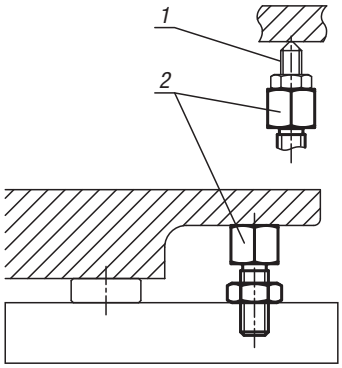

KIPP Jack screws

Order No.	A	B	C	D	E	F	G
K0308.0803006	30	20	13	5	14,4	M8	M6 x 6
K0308.0804006	40	30	13	5	14,4	M8	M6 x 6
K0308.1003808	38	24	17	6	18,9	M10	M8 x 8
K0308.1004808	48	34	17	6	18,9	M10	M8 x 8
K0308.1205110	51	33	22	7	24,5	M12	M10 x 10
K0308.1206610	66	48	22	7	24,5	M12	M10 x 10
K0308.1606212	62	40	27	10	30,1	M16	M12 x 12
K0308.1607712	77	55	27	10	30,1	M16	M12 x 12

Stops

adjustable, with end position feedback

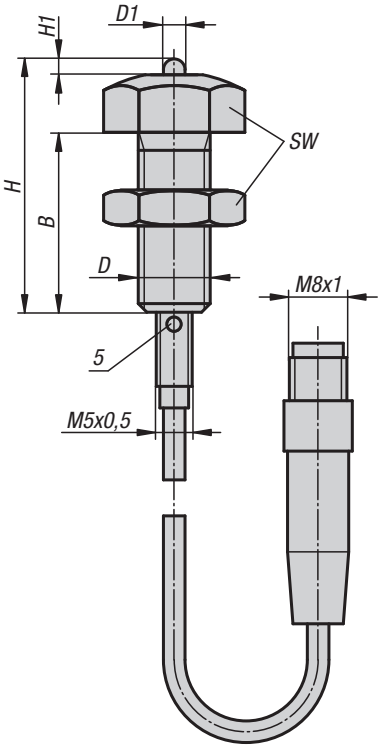

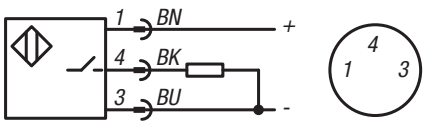

Material:
Screw and plunger stainless steel 1.4301.
Guide bush stainless steel 1.4112.
Sensor housing stainless steel.

Version:
Screw and plunger, bright.
Guide bushing, bright.
Sensor housing, bright.
Inductive sensor:
Relay (NO)
Operating voltage 10 - 30 V DC
Operating current 100 mA
Switching distance 0.8 mm
Protection class: IP 67
Connection type: 0.3 m PUR cable with connector plug
Temperature range: -25°C - +70°C
Approval: CE, c-UL-us

Sample order:
K0581.080352

Note:
The ensured sensing distance is achieved if the plunger is actuated flush up to the stop surface of the guide bush. The sensor is supplied unassembled.

Installation recommendation: glue in with Loctite 638.

Caution: screw sensor in until it comes to a stop.

Safety:
End position feedback stops are not suitable for personal protection.

Drawing reference:
5) LED-indicator

BN = brown
BK = black
BU = blue

KIPP Stops, adjustable, with end position feedback

Order No.	Size	B	D	D1	H	H1	SW
K0581.080352	1	25	M8	3	35,2	2	13
K0581.100352	2	25	M10	3	35,2	2	17
K0581.120352	3	25	M12	3	35,2	2	19

Clamp stops adjustable

for slot profiles

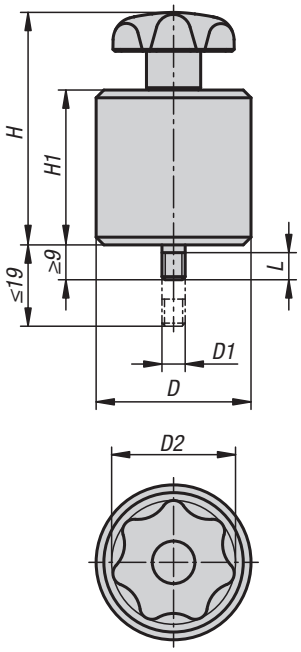

Material:
Body aluminium.
Other metal components steel.
Plastic components PA6.

Version:
Body natural tone anodised.
Other metal components trivalent blue passivated.

Sample order:
K1214.064040

Note:
Sliding stop for profile systems type B, type I, and DIN 650 T-slots. Locked by turning the star grip. Sprung threaded pin ensures smooth sliding without tilting the slot key when loosened.

Accessories:
K1023.0806
K1024.0606
K1024.0806
K1025.0806
K1026.1006
K1027.1006
K0377.06
K0377.061
K0377.806
K0377.2061
K0377.206

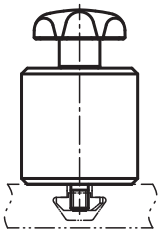

KIPP Clamp stops adjustable for slot profiles

Order No.	D	D1	D2	H	H1	L
K1214.064040	40	M6	32	60	40	7

Spherical washers

DIN 6319, edition 10/01

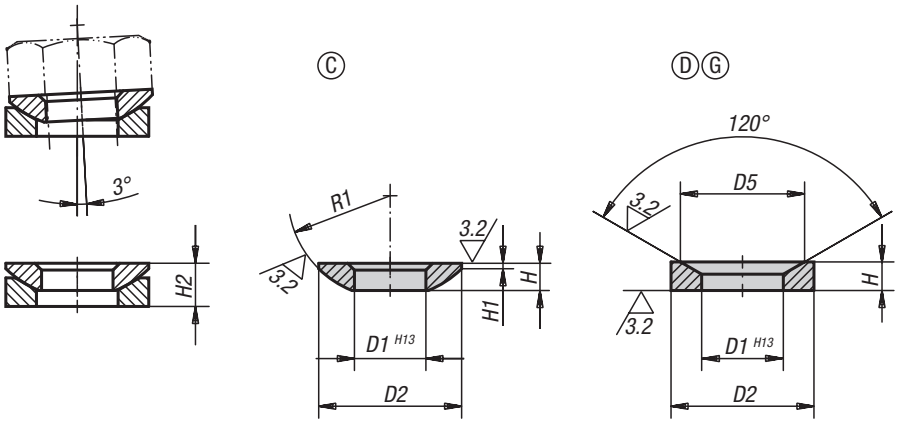

Material:
Mild steel or stainless steel.
Form G high carbon steel tempered to HV 390 ±40.

Version:
Steel version case hardened.
Stainless steel version bright, not hardened.

Sample order:
K0729.216

Note:
Conical seat Form G should be used over slots.

Drawing reference:
Form C: spherical washer
Form D: conical seat
Form G: conical seat for slots

KIPP Spherical washers Form C, DIN 6319, edition 10/01

Order No. mild steel	Order No. stainless steel	Form	D1	D2	H	H1	R1	Load rating max. kN (static load only)
K0729.105	-	C	5,25	10,5	2	0,4	7,5	6,5
K0729.106	**K0729.0106**	C	6,4	12	2,3	0,7	9	9/6
K0729.108	**K0729.0108**	C	8,4	17	3,2	0,6	12	17/12
K0729.110	**K0729.0110**	C	10,5	21	4	0,8	15	26/16
K0729.112	**K0729.0112**	C	13	24	4,6	1,1	17	38/24
K0729.114	-	C	15	28	5	1,2	22	53
K0729.116	**K0729.0116**	C	17	30	5,3	1,3	22	73/45
K0729.120	**K0729.0120**	C	21	36	6,3	2	27	117/71
K0729.124	**K0729.0124**	C	25	44	8,2	2,4	32	168/105
K0729.130	**K0729.0130**	C	31	56	11,2	3,6	41	269/191
K0729.136	**K0729.0136**	C	37	68	14	4,6	50	394/-
K0729.142	**K0729.0142**	C	43	78	17	6,5	58	542/-
K0729.148	**K0729.0148**	C	50	92	21	8	67	714/-
K0729.156	-	C	58	103	23	9,5	79	960
K0729.164	-	C	66	120	27	12	93	1269

Spherical washers

DIN 6319, edition 10/01

KIPP Conical seats Form D, DIN 6319, edition 10/01

Order No. mild steel	Order No. stainless steel	Form	D1	D2	D5	H	H2	Load rating max. kN (static load only)
K0729.205	-	D	6	10,5	9,25	2,1	3,1	6,5
K0729.206	**K0729.0206**	D	7,1	12	11	2,8	4	9/6
K0729.208	**K0729.0208**	D	9,6	17	14,5	3,5	5,6	17/12
K0729.210	**K0729.0210**	D	12	21	18,5	4,2	6,3	26/16
K0729.212	**K0729.0212**	D	14,2	24	20	5	8	38/24
K0729.214	-	D	16,5	28	24,8	5,6	8,2	53
K0729.216	**K0729.0216**	D	19	30	26	6,2	9,3	73/45
K0729.220	**K0729.0220**	D	23,2	36	31	7,5	11,6	117/71
K0729.224	**K0729.0224**	D	28	44	37	9,5	15	168/105
K0729.230	**K0729.0230**	D	35	56	49	12	18,9	269/191
K0729.236	**K0729.0236**	D	42	68	60	15	23,3	394/-
K0729.242	**K0729.0242**	D	49	78	70	18	28,3	542/-
K0729.248	**K0729.0248**	D	56	92	82	22	35,2	714/-
K0729.256	-	D	65	103	92	25	39,7	960
K0729.264	-	D	75	120	110	30	46,5	1269

KIPP Conical seats Form G, DIN 6319 Edition 10/01

Order No. high carbon steel	Order No. stainless steel	Form	D1	D2	D5	H	H2	Load rating max. kN (static load only)
K0729.305	-	G	6	15	9,25	2,5	3,5	6,5
K0729.306	**K0729.0306**	G	7,1	17	11	4	5,2	9/6
K0729.308	**K0729.0308**	G	9,6	24	14,5	5	6,8	17/12
K0729.310	**K0729.0310**	G	12	30	18,5	5	7,1	26/16
K0729.312	**K0729.0312**	G	14,2	36	20	6	9	38/24
K0729.314	-	G	16,5	40	24,8	6	8,6	53
K0729.316	**K0729.0316**	G	19	44	26	7	10,1	73/45
K0729.320	**K0729.0320**	G	23,2	50	31	8	12	117/71
K0729.324	**K0729.0324**	G	28	60	37	10	15,5	168/105
K0729.330	**K0729.0330**	G	35	68	49	12	18,7	269/191
K0729.336	-	G	42	80	60	12	20,3	394

Spherical levelling washers

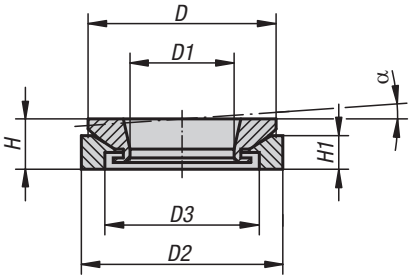

Material:
Steel 1.7225.
Stainless steel 1.4305.

Version:
Steel trivalent blue passivated.
Stainless steel, bright.

Sample order:
K0691.401

Note:
Spherical levelling washers are for exact positioning when mounting up to 4° inclined surfaces. A second spherical levelling washer is recommended as support to correct the bolt angle if the angle of D3 is > 1°. The two washers cannot be detached from each other.

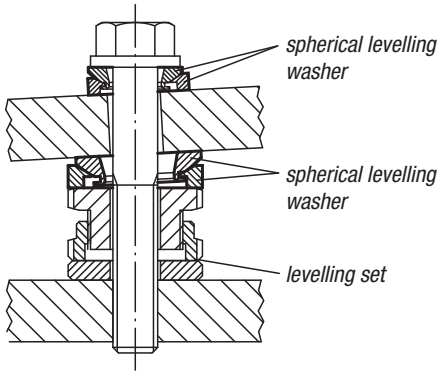

KIPP Spherical levelling washers

Order No. steel	Order No. stainless steel	H	H1	D	D1	D2	D3	α
K0691.151	**K0691.152**	8	5,5	23	8,5	25	15	4°
K0691.201	**K0691.202**	10	6,2	30	13	32	20	4°
K0691.301	**K0691.302**	12,5	9	40	20	45	30	4°
K0691.401	**K0691.402**	16	13	52	29	58	38	4°
K0691.501	**K0691.502**	20	14	65	36	70	48	4°

Locating cylinder

Ball Lock

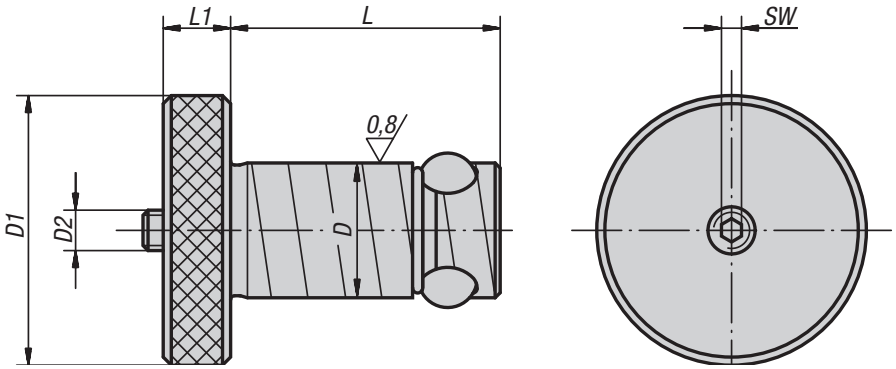

Material:
Locating cylinder carbon steel.
Balls roller bearing steel.

Version:
Locating cylinder tempered, black oxidised.
Balls hardened, bright.

Sample order:
K0935.16020

Note:
By tightening the thrust screw (D2) the centre ball is pressed downwards and in turn forces the three locking balls outwards, where they locked in the receiver bush.
With this easy to use system machine set-up times are up to twelve times shorter than when conventional methods are used.

KIPP Locating cylinders Ball lock

Order No.	Grid plate thickness ±0,05	D	D1	D2	L	L1	SW	Holding force F kN	Tightening torque max. Nm	Order No. Repair Kit
K0935.13013	13	13	22	M5	27,6	6	2,5	3,3	1	K0935.913013
K0935.13020	20	13	22	M5	34,6	6	2,5	3,3	1	K0935.913020
K0935.16020	20	16	32	M6	36,5	8	3	5,3	3	K0935.916020
K0935.16025	25	16	32	M6	41,5	8	3	5,3	3	K0935.916025
K0935.20020	20	20	40	M6	39,5	10	3	13,3	4	K0935.920020
K0935.20025	25	20	40	M6	44,5	10	3	13,3	4	K0935.920025
K0935.25020	20	25	45	M8	44	10	4	30	9	K0935.925020
K0935.25025	25	25	45	M8	49	10	4	30	9	K0935.925025
K0935.30020	20	30	50	M10	49	13	5	44	15	K0935.930020
K0935.30025	25	30	50	M10	54	13	5	44	15	K0935.930025
K0935.35020	20	35	60	M12	51	13	6	68	25	K0935.935020
K0935.35025	25	35	60	M12	56	13	6	68	25	K0935.935025
K0935.35040	40	35	60	M12	71	13	6	68	25	K0935.935040
K0935.35050	50	35	60	M12	81	13	6	68	25	K0935.935050
K0935.50020	20	50	75	M20	64	20	10	88	50	K0935.950020
K0935.50025	25	50	75	M20	69	20	10	88	50	K0935.950025
K0935.50040	40	50	75	M20	84	20	10	88	50	K0935.950040
K0935.50050	50	50	75	M20	94	20	10	88	50	K0935.950050

Locating cylinder stainless steel

Ball Lock

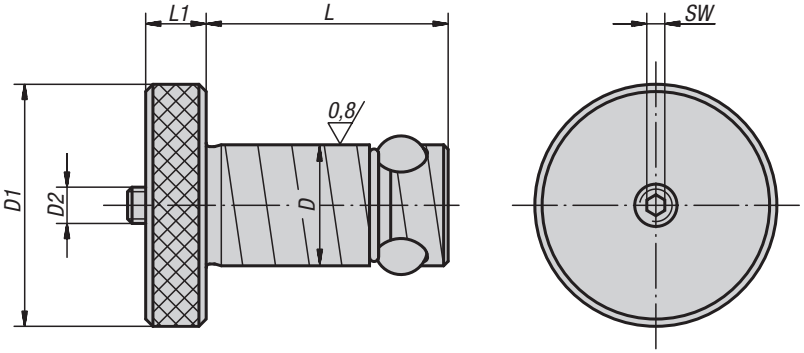

Material:
Locating cylinder and ball stainless steel 1.4542.

Version:
Locating cylinder and ball hardened to min. 40 HRC, bright.

Sample order:
K1474.16020

Note:
By tightening the thrust screw (D2) the centre ball is pressed downwards and in turn forces the three locking balls outwards, where they locked in the receiver bush.
With this easy to use system machine set-up times are up to twelve times shorter than when conventional methods are used.

KIPP Locating cylinder stainless steel Ball Lock

Order No.	Grid plate thickness ±0.13	D	D1	D2	L	L1	SW	Holding force F kN	Tightening torque max. Nm	Order No. Repair Kit
K1474.13013	13	13	22	M5	27,6	6	2,5	3,3	1,2	K1474.913013
K1474.13020	20	13	22	M5	34,6	6	2,5	3,3	1,2	K1474.913020
K1474.16020	20	16	32	M6	36,5	8	3	5,3	4,5	K1474.916020
K1474.16025	25	16	32	M6	41,5	8	3	5,3	4,5	K1474.916025
K1474.20020	20	20	40	M6	39,5	10	3	13,3	5,3	K1474.920020
K1474.20025	25	20	40	M6	44,4	10	3	13,3	5,3	K1474.920025
K1474.25020	20	25	45	M8	44	10	4	30	11	K1474.925020
K1474.25025	25	25	45	M8	49	10	4	30	11	K1474.925025
K1474.30020	20	30	50	M10	49	13	5	44	18	K1474.930020
K1474.30025	25	30	50	M10	54	13	5	44	18	K1474.930025
K1474.35020	20	35	60	M12	51	13	6	68	33	K1474.935020
K1474.35025	25	35	60	M12	56	13	6	68	33	K1474.935025
K1474.35040	40	35	60	M12	71	13	6	68	33	K1474.935040
K1474.35050	50	35	60	M12	81	13	6	68	33	K1474.935050
K1474.50020	20	50	75	M20	64	20	10	88	65	K1474.950020
K1474.50025	25	50	75	M20	69	20	10	88	65	K1474.950025
K1474.50040	40	50	75	M20	84	20	10	88	65	K1474.950040
K1474.50050	50	50	75	M20	94	20	10	88	65	K1474.950050

Locating cylinder

with quick clamping system

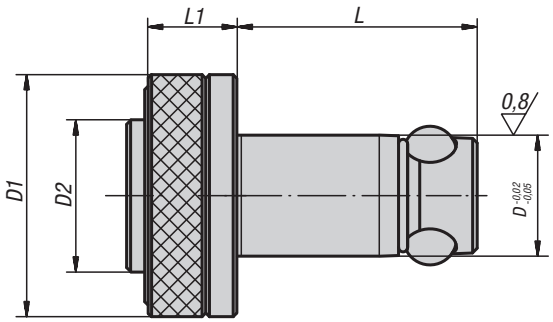

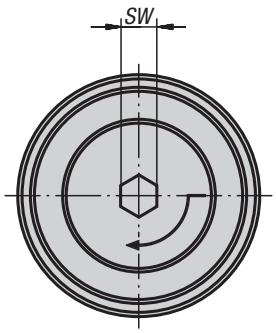

Material:
Locating cylinder carbon steel.
Balls roller bearing steel.

Version:
Locating cylinder tempered, black oxidised.
Balls hardened, bright.

Sample order:
K0935.112013

Note:
Locating cylinder with quick-clamp system for extra timesaving during setups.

Insert the locating cylinder into the receiving hole and press the button. The three balls are pushed out and position the components. By tightening the set screw a 1/4 turn using an hexagonal key, the components are positively and securely held.

KIPP Locating cylinder with quick clamping system

Order No.	Grid plate thickness ±0,05	D	D1	D2	L	L1	SW	Holding force F kN	Tightening torque max. Nm
K0935.116025	25	16	32	20	41,5	15	6	8	2
K0935.113013	13	13	25	16	27,6	12	4	4	1
K0935.116020	20	16	32	20	36,5	15	6	8	2
K0935.120025	25	20	40	25	44,5	15	6	8	2
K0935.113020	20	13	25	16	34,6	12	4	4	1
K0935.120020	20	20	40	25	39,5	15	6	8	2

Centring bushes

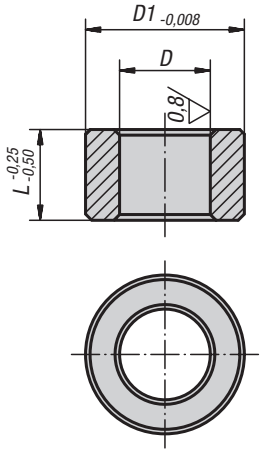

Material:
Ball bearing steel

Version:
Hardened, black oxidised.

Sample order:
K0936.113020

Note:
By a centre distance tolerance of ±0.005 mm and two grade I centring bushes a repeat accuracy of ±0.013 mm is possible.
By a centre distance tolerance of ±0.03 mm and one grade I and one grade II centring bush a repeat accuracy of 0.04 mm is possible.
The centring bushes are pressed into the receiver holes of the tooling plates using a light pressure.
For further details see “General information”.

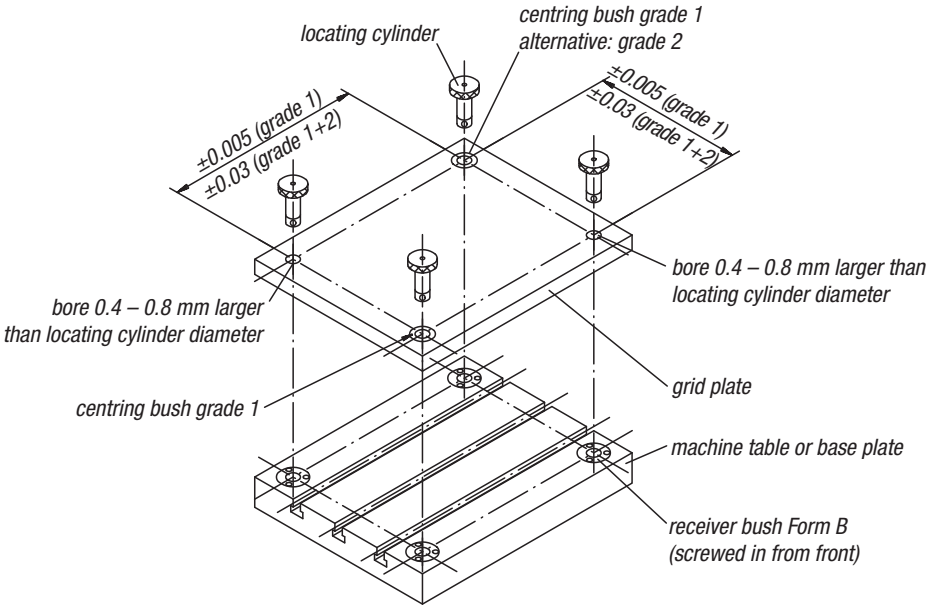

KIPP Centring bushes

Order No. grade i	T=tolerance grade i	Order No. grade ii	T=tolerance grade ii	D	D1	L	Bore size for centring bush Ø +0.01
K0936.113013	+0,005 - +0,018	**K0936.213013**	+0,025 - +0,050	13	19,04	13	19,016
K0936.113020	+0,005 - +0,018	**K0936.213020**	+0,025 - +0,050	13	19,04	20	19,016
K0936.116020	+0,005 - +0,018	**K0936.216020**	+0,025 - +0,050	16	25,042	20	25,016
K0936.116025	+0,005 - +0,018	**K0936.216025**	+0,025 - +0,050	16	25,042	25	25,016
K0936.120020	+0,005 - +0,018	**K0936.220020**	+0,025 - +0,050	20	35,042	20	35,018
K0936.120025	+0,005 - +0,018	**K0936.220025**	+0,025 - +0,050	20	35,042	25	35,018
K0936.125020	+0,005 - +0,018	**K0936.225020**	+0,025 - +0,050	25	35,042	20	35,018
K0936.125025	+0,005 - +0,018	**K0936.225025**	+0,025 - +0,050	25	35,042	25	35,018
K0936.130020	+0,005 - +0,018	**K0936.230020**	+0,025 - +0,050	30	45,042	20	45,018
K0936.130025	+0,005 - +0,018	-	-	30	45,042	25	45,018
K0936.135020	+0,005 - +0,018	-	-	35	45,042	20	45,018
K0936.135025	+0,005 - +0,018	**K0936.235025**	+0,025 - +0,050	35	45,042	25	45,018
K0936.135040	+0,005 - +0,018	**K0936.235040**	+0,025 - +0,050	35	45,042	40	45,018
K0936.135050	+0,005 - +0,018	**K0936.235050**	+0,025 - +0,050	35	45,042	50	45,018
K0936.150020	+0,005 - +0,018	-	-	50	63,546	20	63,521
K0936.150040	+0,005 - +0,018	**K0936.250040**	+0,025 - +0,050	50	63,546	40	63,521
K0936.150050	+0,005 - +0,018	**K0936.250050**	+0,025 - +0,050	50	63,546	50	63,521
-	-	**K0936.250025**	+0,025 - +0,050	50	63,546	25	63,521

Centring bushes stainless steel

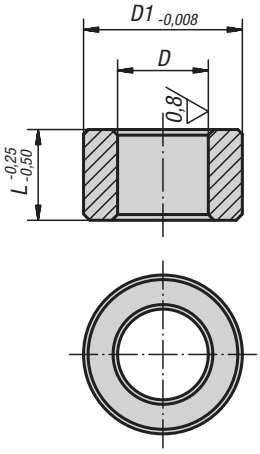

Material:
Stainless steel 1.4548.

Version:
Hardened to min. 40 HRC, bright.

Sample order:
K1475.113020

Note:
By a centre distance tolerance of ±0.005 mm and two grade I centring bushes a repeat accuracy of ±0.013 mm is possible.
By a centre distance tolerance of ±0.03 mm and one grade I and one grade II centring bush a repeat accuracy of 0.04 mm is possible.
The centring bushes are pressed into the receiver holes of the tooling plates using a light pressure.
For further details see “General information”.

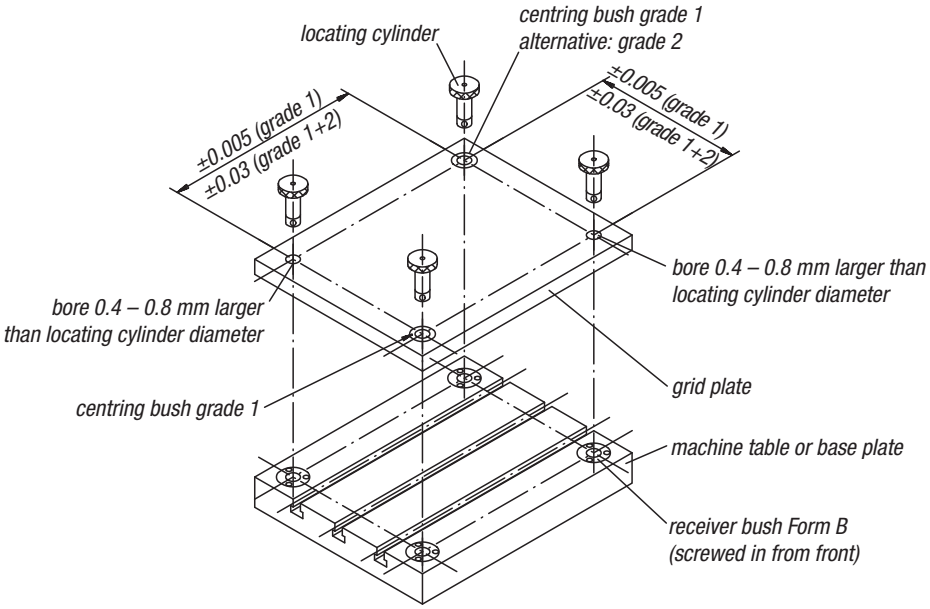

KIPP Centring bushes stainless steel

Order No. grade I	T=tolerance grade I	Order No. grade II	T=tolerance grade II	D	D1	L	Bore size for centring bush Ø +0.01
K1475.113013	+0,005 - +0,018	**K1475.213013**	+0,025 - +0,050	13	19,04	13	19,016
K1475.113020	+0,005 - +0,018	**K1475.213020**	+0,025 - +0,050	13	19,04	20	19,016
K1475.116020	+0,005 - +0,018	**K1475.216020**	+0,025 - +0,050	16	25,042	20	25,016
K1475.116025	+0,005 - +0,018	**K1475.216025**	+0,025 - +0,050	16	25,042	25	25,016
K1475.120020	+0,005 - +0,018	**K1475.220020**	+0,025 - +0,050	20	35,042	20	35,018
K1475.120025	+0,005 - +0,018	**K1475.220025**	+0,025 - +0,050	20	35,042	25	35,018
K1475.125020	+0,005 - +0,018	**K1475.225020**	+0,025 - +0,050	25	35,042	20	35,018
K1475.125025	+0,005 - +0,018	**K1475.225025**	+0,025 - +0,050	25	35,042	25	35,018
K1475.130020	+0,005 - +0,018	**K1475.230020**	+0,025 - +0,050	30	45,042	20	45,018
K1475.130025	+0,005 - +0,018	**K1475.230025**	+0,025 - +0,050	30	45,042	25	45,018
K1475.135020	+0,005 - +0,018	**K1475.235020**	+0,025 - +0,050	35	45,042	20	45,018
K1475.135025	+0,005 - +0,018	**K1475.235025**	+0,025 - +0,050	35	45,042	25	45,018
K1475.135040	+0,005 - +0,018	**K1475.235040**	+0,025 - +0,050	35	45,042	40	45,018
K1475.135050	+0,005 - +0,018	**K1475.235050**	+0,025 - +0,050	35	45,042	50	45,018
K1475.150020	+0,005 - +0,018	**K1475.250020**	+0,025 - +0,050	50	63,546	20	63,521
K1475.150025	+0,005 - +0,018	**K1475.250025**	+0,025 - +0,050	50	63,546	25	63,521
K1475.150040	+0,005 - +0,018	**K1475.250040**	+0,025 - +0,050	50	63,546	40	63,521
K1475.150050	+0,005 - +0,018	**K1475.250050**	+0,025 - +0,050	50	63,546	50	63,521

K0937

Receiver bushes

Form A (pressed in from rear)

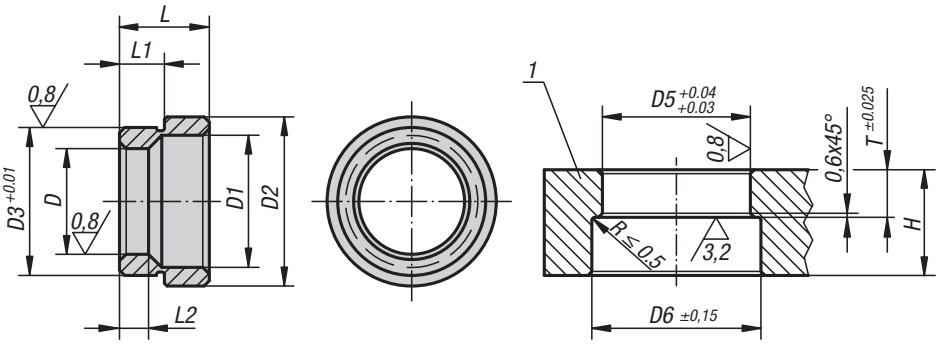

Material:
Stainless steel 1.4548.

Version:
Hardened to min. 40 HRC, bright.

Sample order:
K1476.20

Drawing reference:
1) grid plate

KIPP Receiver bushes Form A (pressed in from rear)

Order No.	D	D1	D2	D3	L	L1	L2	D5	D6	T	Min. grid plate thickness H
K0937.13	13	17,3	25	20,03	12,1	6,6	5,58	20	26	6,92	20
K0937.16	16	20,7	28,6	22,03	12,1	6,9	6,6	22	29	7,24	20
K0937.20	20	24,8	32,2	28,03	17,1	8,42	8,13	28	33	8,74	25
K0937.25	25	30,4	40,2	35,03	21	10,22	10,16	35	41	10,54	25
K0937.30	30	36,2	48,2	42,03	21,8	10,63	11,18	42	49	10,95	30
K0937.35	35	41,3	54,2	48,03	25,1	12,18	14,78	48	55	12,5	32
K0937.50	50	58,4	75,2	67,03	31,1	15,43	18,67	67	76	15,75	45

K1476

Adapter bushes, stainless steel

Form A (pressed in from rear)

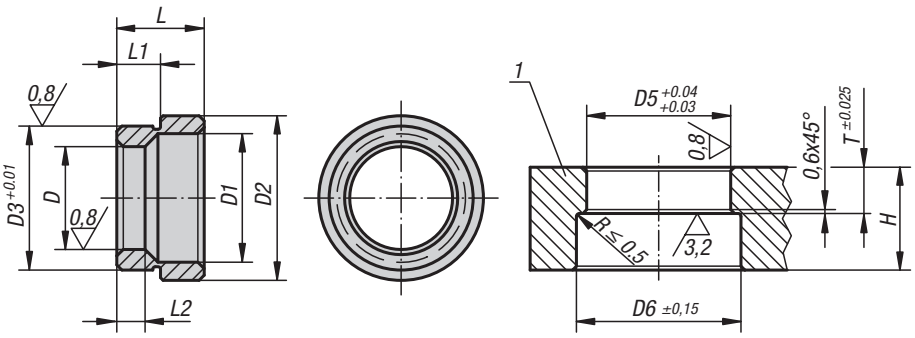

Material:
Stainless steel 1.4548.

Version:
Hardened to min. 40 HRC, bright.

Sample order:
K1476.20

Drawing reference:
1) grid plate

KIPP Receiver bushes stainless steel Form A (pressed in from rear)

Order No.	D	D1	D2	D3	L	L1	L2	D5	D6	T	Min. grid plate thickness H
K1476.13	13	17,3	25	20,03	12,1	6,6	5,58	20	26	6,92	20
K1476.16	16	20,7	28,6	22,03	12,1	6,9	6,6	22	29	7,24	20
K1476.20	20	24,8	32,2	28,03	17,1	8,42	8,13	28	33	8,74	25
K1476.25	25	30,4	40,2	35,03	21	10,22	10,16	35	41	10,54	25
K1476.30	30	36,2	48,2	42,03	21,8	10,63	11,18	42	49	10,95	30
K1476.35	35	41,3	54,2	48,03	25,1	12,18	14,78	48	55	12,5	32
K1476.50	50	58,4	75,2	67,03	31,1	15,43	18,67	67	76	15,75	45

K0938

Receiver bushes

Form B (screwed down from front)

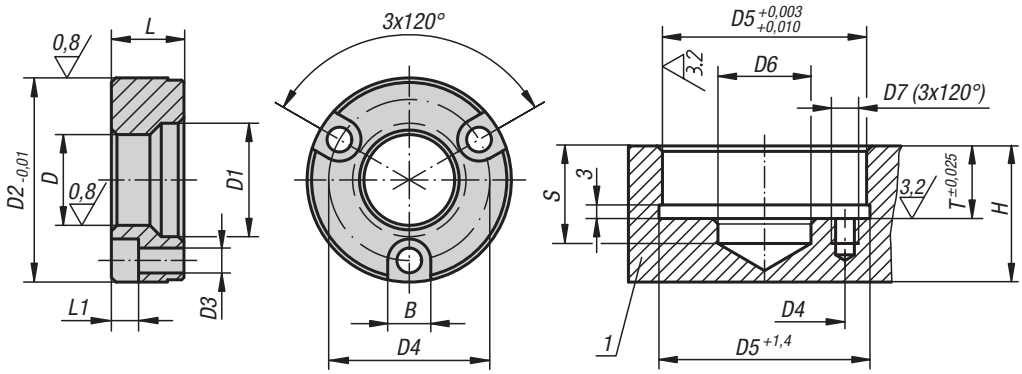

Material:
Carbon steel.

Version:
Tempered and black oxidised.

Sample order:
K0938.13

Note:
Fastening screws included.

Drawing reference:
1) grid plate

KIPP Receiver bushes Form B (screwed down from front)

Order No.	D	D1	D2	D3	D4	L	L1	B	D5	D6	D7	S	T	Min. grid plate thickness H
K0938.13	13	17,3	34,99	4,4	25	11,56	4,5	7,6	35	13,5	M4x7	20	11,91	20
K0938.16	16	20,7	36,99	4,4	29	11,56	4,5	7,6	37	21	M4x7	20	11,91	20
K0938.20	20	24,8	44,99	5,4	35	15,82	6	9,5	45	21	M5x9	25	16,21	25
K0938.25	25	30,4	54,99	6,4	42	19,94	7	11	55	25,5	M6x10	25	20,32	25
K0938.30	30	36,2	59,99	6,4	48	21,77	7	11	60	30,5	M6x11	30	22,15	30
K0938.35	35	41,3	69,99	8,4	56	22,61	9	14	70	40	M8x17	32	22,99	32
K0938.50	50	58,4	91,99	10,4	75	31,12	11	17	92	55	M10x18	45	31,5	45

K1477

Adapter bushes, stainless steel

Form B (screw front side)

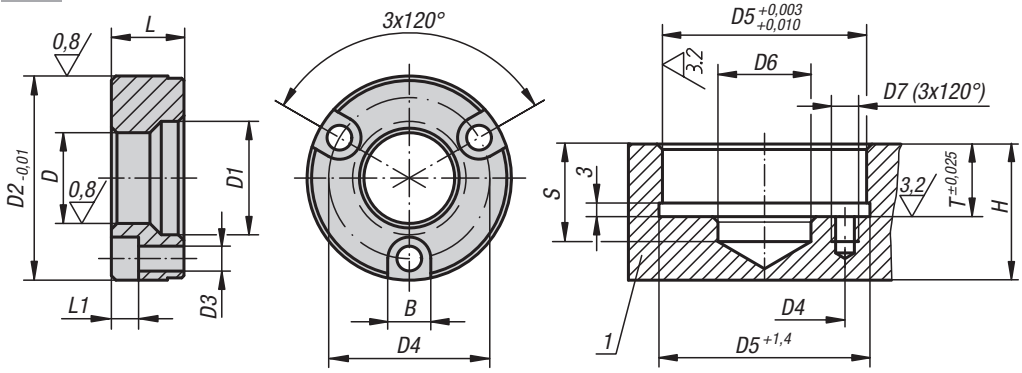

Material:
Stainless steel 1.4548.

Version:
Hardened to min. 40 HRC, bright.

Sample order:
K1477.13

Note:
Fastening screws included.

Drawing reference:
1) grid plate

KIPP Receiver bushes stainless steel Form B (screwed down from front)

Order No.	D	D1	D2	D3	D4	L	L1	B	D5	D6	D7	S	T	Min. grid plate thickness H
K1477.13	13	17,3	34,99	4,4	25	11,56	4,5	7,6	35	13,5	M4x7	20	11,91	20
K1477.16	16	20,7	36,99	4,4	29	11,56	4,5	7,6	37	21	M4x7	20	11,91	20
K1477.20	20	24,8	44,99	5,4	35	15,82	6	9,5	45	21	M5x9	25	16,21	25
K1477.25	25	30,4	54,99	6,4	42	19,94	7	11	55	25,5	M6x10	25	20,32	25
K1477.30	30	36,2	59,99	6,4	48	21,77	7	11	60	30,5	M6x11	30	22,15	30
K1477.35	35	41,3	69,99	8,4	56	22,61	9	14	70	40	M8x17	32	22,99	32
K1477.50	50	58,4	91,99	10,4	75	31,12	11	17	92	55	M10x18	45	31,5	45

Levelling sets

high version

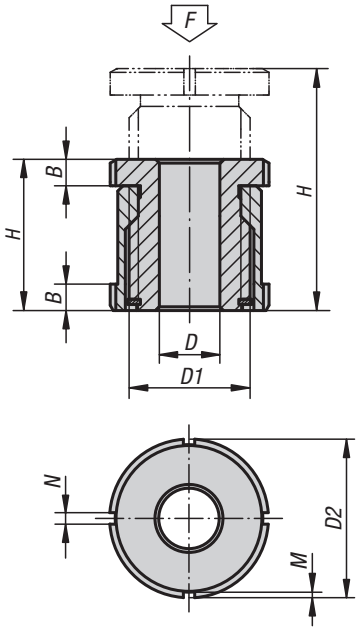

Material:
Steel 1.7225.
Stainless steel 1.4305.

Version:
Seel version trivalent blue passivated.
Stainless steel version bright.

Sample order:
K0692.01505

Note:
Levelling sets are used for mounting, levelling and aligning motors, aggregates, drive units and assembly lines. They have a large adjustment range of 15 mm to 40 mm. Other sizes available on request.

KIPP Levelling sets, high version

Order No.	Main material	D	for screw	D1	D2	H min.	H max.	B	N	M	F kN
K0692.01504	high carbon steel	4,5	M4	M15x1	25	28	43	5	4	2	40
K0692.01505	high carbon steel	5,5	M5	M15x1	25	28	43	5	4	2	40
K0692.01506	high carbon steel	6,6	M6	M15x1	25	28	43	5	4	2	40
K0692.02006	high carbon steel	6,6	M6	M20x1	32	35	55	6	4	2	65
K0692.02008	high carbon steel	9	M8	M20x1	32	35	55	6	4	2	65
K0692.02010	high carbon steel	11	M10	M20x1	32	35	55	6	4	2	65
K0692.02510	high carbon steel	11	M10	M30x1,5	45	42	67	7	5	2	120
K0692.02512	high carbon steel	13,5	M12	M30x1,5	45	42	67	7	5	2	120
K0692.02516	high carbon steel	17,5	M16	M30x1,5	45	42	67	7	5	2	120
K0692.03216	high carbon steel	17,5	M16	M40x1,5	58	54	86	9	6	2,5	210
K0692.03220	high carbon steel	22	M20	M40x1,5	58	54	86	9	6	2,5	210
K0692.03224	high carbon steel	26	M24	M40x1,5	58	54	86	9	6	2,5	210
K0692.04020	high carbon steel	22	M20	M50x1,5	70	66	106	11	6	2,5	330
K0692.04024	high carbon steel	26	M24	M50x1,5	70	66	106	11	6	2,5	330
K0692.04030	high carbon steel	33	M30	M50x1,5	70	66	106	11	6	2,5	330
K0692.015041	stainless steel	4,5	M4	M15x1	25	28	43	5	4	2	27,1
K0692.015051	stainless steel	5,5	M5	M15x1	25	28	43	5	4	2	27,1
K0692.015061	stainless steel	6,6	M6	M15x1	25	28	43	5	4	2	27,1
K0692.020061	stainless steel	6,6	M6	M20x1	32	35	55	6	4	2	43,4
K0692.020081	stainless steel	9	M8	M20x1	32	35	55	6	4	2	43,4
K0692.020101	stainless steel	11	M10	M20x1	32	35	55	6	4	2	43,4
K0692.025101	stainless steel	11	M10	M30x1,5	45	42	67	7	5	2	84
K0692.025121	stainless steel	13,5	M12	M30x1,5	45	42	67	7	5	2	84
K0692.025161	stainless steel	17,5	M16	M30x1,5	45	42	67	7	5	2	84
K0692.032161	stainless steel	17,5	M16	M40x1,5	58	54	86	9	6	2,5	148
K0692.032201	stainless steel	22	M20	M40x1,5	58	54	86	9	6	2,5	148
K0692.032241	stainless steel	26	M24	M40x1,5	58	54	86	9	6	2,5	148
K0692.040201	stainless steel	22	M20	M50x1,5	70	66	106	11	6	2,5	225
K0692.040241	stainless steel	26	M24	M50x1,5	70	66	106	11	6	2,5	225
K0692.040301	stainless steel	33	M30	M50x1,5	70	66	106	11	6	2,5	225

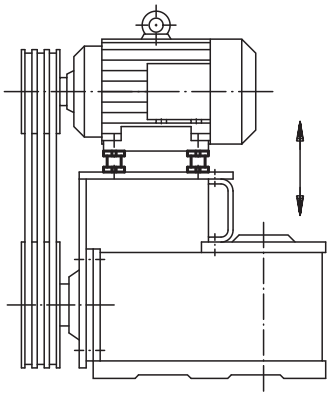

Levelling sets

with locknut

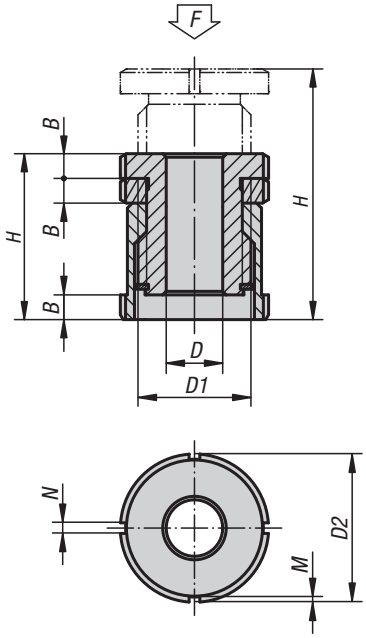

Material:
Steel 1.7225.
Stainless steel 1.4305.

Version:
Seel version trivalent blue passivated.
Stainless steel version bright.

Sample order:
K0693.01004

Note:
Levelling sets are used for mounting, levelling and aligning motors, aggregates, drive units and assembly lines. The locknut locks the set height. Other sizes available on request.

KIPP Levelling sets, with locknut

Order No.	Main material	D	for screw	D1	D2	H min.	H max.	B	N	M	F kN
K0693.01004	high carbon steel	4,5	M4	M15x1	25	33	43	5	4	2	40
K0693.01005	high carbon steel	5,5	M5	M15x1	25	33	43	5	4	2	40
K0693.01006	high carbon steel	6,6	M6	M15x1	25	33	43	5	4	2	40
K0693.01406	high carbon steel	6,6	M6	M20x1	32	41	55	6	4	2	65
K0693.01408	high carbon steel	9	M8	M20x1	32	41	55	6	4	2	65
K0693.01410	high carbon steel	11	M10	M20x1	32	41	55	6	4	2	65
K0693.01810	high carbon steel	11	M10	M30x1,5	45	49	67	7	5	2	120
K0693.01812	high carbon steel	13,5	M12	M30x1,5	45	49	67	7	5	2	120
K0693.01816	high carbon steel	17,5	M16	M30x1,5	45	49	67	7	5	2	120
K0693.02316	high carbon steel	17,5	M16	M40x1,5	58	63	86	9	6	2,5	210
K0693.02320	high carbon steel	22	M20	M40x1,5	58	63	86	9	6	2,5	210
K0693.02324	high carbon steel	26	M24	M40x1,5	58	63	86	9	6	2,5	210
K0693.02920	high carbon steel	22	M20	M50x1,5	70	77	106	11	6	2,5	330
K0693.02924	high carbon steel	26	M24	M50x1,5	70	77	106	11	6	2,5	330
K0693.02930	high carbon steel	33	M30	M50x1,5	70	77	106	11	6	2,5	330
K0693.010041	stainless steel	4,5	M4	M15x1	25	33	43	5	4	2	27,1
K0693.010051	stainless steel	5,5	M5	M15x1	25	33	43	5	4	2	27,1
K0693.010061	stainless steel	6,6	M6	M15x1	25	33	43	5	4	2	27,1
K0693.014061	stainless steel	6,6	M6	M20x1	32	41	55	6	4	2	43,4
K0693.014081	stainless steel	9	M8	M20x1	32	41	55	6	4	2	43,4
K0693.014101	stainless steel	11	M10	M20x1	32	41	55	6	4	2	43,4
K0693.018101	stainless steel	11	M10	M30x1,5	45	49	67	7	5	2	84
K0693.018121	stainless steel	13,5	M12	M30x1,5	45	49	67	7	5	2	84
K0693.018161	stainless steel	17,5	M16	M30x1,5	45	49	67	7	5	2	84
K0693.023161	stainless steel	17,5	M16	M40x1,5	58	63	86	9	6	2,5	148
K0693.023201	stainless steel	22	M20	M40x1,5	58	63	86	9	6	2,5	148
K0693.023241	stainless steel	26	M24	M40x1,5	58	63	86	9	6	2,5	148
K0693.029201	stainless steel	22	M20	M50x1,5	70	77	106	11	6	2,5	225
K0693.029241	stainless steel	26	M24	M50x1,5	70	77	106	11	6	2,5	225
K0693.029301	stainless steel	33	M30	M50x1,5	70	77	106	11	6	2,5	225

Levelling sets

low version

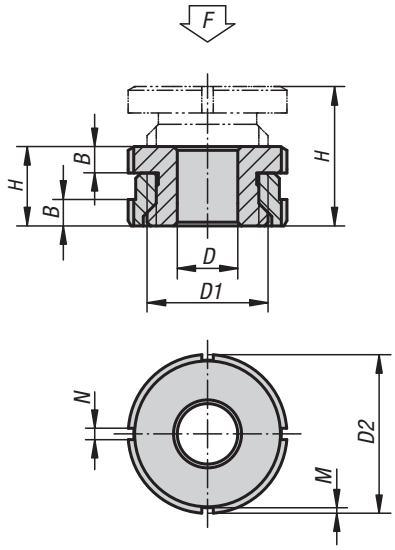

Material:
Steel 1.7225.
Stainless steel 1.4305.

Version:
Seel version trivalent blue passivated.
Stainless steel version bright.

Sample order:
K0694.0404

Note:
Levelling sets are used for mounting, levelling and aligning motors, aggregates, drive units and assembly lines. This levelling set has an extremely low height. Single levelling sets can be set at several mounting points to achieve a precise and torsion-free alignment.

KIPP Levelling sets, low version

Order No.	Main material	D	for screw	D1	D2	H min.	H max.	B	N	M	F kN
K0694.0404	high carbon steel	4,5	M4	M15x1	25	15	19	5	4	2	40
K0694.0405	high carbon steel	5,5	M5	M15x1	25	15	19	5	4	2	40
K0694.0406	high carbon steel	6,6	M6	M15x1	25	15	19	5	4	2	40
K0694.0506	high carbon steel	6,6	M6	M20x1	32	18	23	6	4	2	65
K0694.0508	high carbon steel	9	M8	M20x1	32	18	23	6	4	2	65
K0694.0510	high carbon steel	11	M10	M20x1	32	18	23	6	4	2	65
K0694.0710	high carbon steel	11	M10	M30x1,5	45	22	29	7	5	2	120
K0694.0712	high carbon steel	13,5	M12	M30x1,5	45	22	29	7	5	2	120
K0694.0716	high carbon steel	17,5	M16	M30x1,5	45	22	29	7	5	2	120
K0694.0916	high carbon steel	17,5	M16	M40x1,5	58	28	37	9	6	2,5	210
K0694.0920	high carbon steel	22	M20	M40x1,5	58	28	37	9	6	2,5	210
K0694.0924	high carbon steel	26	M24	M40x1,5	58	28	37	9	6	2,5	210
K0694.1020	high carbon steel	22	M20	M50x1,5	70	33	43	11	6	2,5	330
K0694.1024	high carbon steel	26	M24	M50x1,5	70	33	43	11	6	2,5	330
K0694.1030	high carbon steel	33	M30	M50x1,5	70	33	43	11	6	2,5	330
K0694.04041	stainless steel	4,5	M4	M15x1	25	15	19	5	4	2	27,1
K0694.04051	stainless steel	5,5	M5	M15x1	25	15	19	5	4	2	27,1
K0694.04061	stainless steel	6,6	M6	M15x1	25	15	19	5	4	2	27,1
K0694.05061	stainless steel	6,6	M6	M20x1	32	18	23	6	4	2	43,4
K0694.05081	stainless steel	9	M8	M20x1	32	18	23	6	4	2	43,4
K0694.05101	stainless steel	11	M10	M20x1	32	18	23	6	4	2	43,4
K0694.07101	stainless steel	11	M10	M30x1,5	45	22	29	7	5	2	84
K0694.07121	stainless steel	13,5	M12	M30x1,5	45	22	29	7	5	2	84
K0694.07161	stainless steel	17,5	M16	M30x1,5	45	22	29	7	5	2	84
K0694.09161	stainless steel	17,5	M16	M40x1,5	58	28	37	9	6	2,5	148
K0694.09201	stainless steel	22	M20	M40x1,5	58	28	37	9	6	2,5	148
K0694.09241	stainless steel	26	M24	M40x1,5	58	28	37	9	6	2,5	148
K0694.10201	stainless steel	22	M20	M50x1,5	70	33	43	11	6	2,5	225
K0694.10241	stainless steel	26	M24	M50x1,5	70	33	43	11	6	2,5	225
K0694.10301	stainless steel	33	M30	M50x1,5	70	33	43	11	6	2,5	225

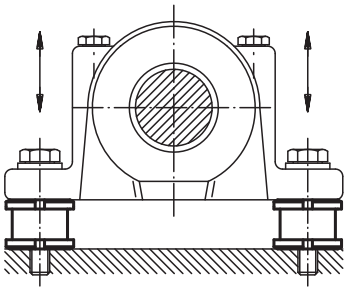

Levelling sets

spherical washer

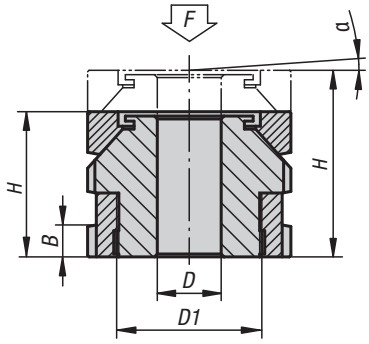

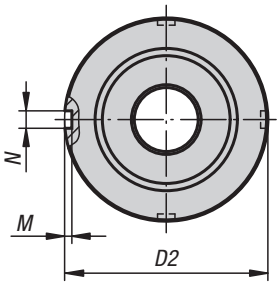

Material:
Steel 1.7225.
Stainless steel 1.4305.

Version:
Seel version trivalent blue passivated.
Stainless steel version bright.

Sample order:
K0695.0406

Note:
Levelling sets with spherical washers are used for mounting, levelling and aligning motors, aggregates, drive units and assembly lines. The spherical washer permits exact alignment when mounting inclined surfaces of up to 4°.

KIPP Levelling Sets with spherical washer

Order No.	Main material	D	for screw	D1	D2	H min.	H max.	B	N	M	α	F kN
K0695.0406	high carbon steel	6,6	M6	M15x1	25	22	26	5	4	2	4°	40
K0695.0506	high carbon steel	6,6	M6	M20x1	32	26	31	6	4	2	4°	65
K0695.0508	high carbon steel	9	M8	M20x1	32	26	31	6	4	2	4°	65
K0695.0510	high carbon steel	11	M10	M20x1	32	26	31	6	4	2	4°	65
K0695.0710	high carbon steel	11	M10	M30x1,5	45	34	41	7	5	2	4°	120
K0695.0712	high carbon steel	13,5	M12	M30x1,5	45	34	41	7	5	2	4°	120
K0695.0716	high carbon steel	17,5	M16	M30x1,5	45	34	41	7	5	2	4°	120
K0695.0916	high carbon steel	17,5	M16	M40x1,5	58	44	53	9	6	2,5	4°	210
K0695.0920	high carbon steel	22	M20	M40x1,5	58	44	53	9	6	2,5	4°	210
K0695.0924	high carbon steel	26	M24	M40x1,5	58	44	53	9	6	2,5	4°	210
K0695.1020	high carbon steel	22	M20	M50x1,5	70	50	60	11	6	2,5	4°	330
K0695.1024	high carbon steel	26	M24	M50x1,5	70	50	60	11	6	2,5	4°	330
K0695.1030	high carbon steel	33	M30	M50x1,5	70	50	60	11	6	2,5	4°	330
K0695.1224	high carbon steel	26	M24	M60x2	80	56	68	11	7	3	4°	495
K0695.1230	high carbon steel	33	M30	M60x2	80	56	68	11	7	3	4°	495
K0695.04061	stainless steel	6,6	M6	M15x1	25	22	26	5	4	2	4°	27,1
K0695.05061	stainless steel	6,6	M6	M20x1	32	26	31	6	4	2	4°	43,4
K0695.05081	stainless steel	9	M8	M20x1	32	26	31	6	4	2	4°	43,4
K0695.05101	stainless steel	11	M10	M20x1	32	26	31	6	4	2	4°	43,4
K0695.07101	stainless steel	11	M10	M30x1,5	45	34	41	7	5	2	4°	84
K0695.07121	stainless steel	13,5	M12	M30x1,5	45	34	41	7	5	2	4°	84
K0695.07161	stainless steel	17,5	M16	M30x1,5	45	34	41	7	5	2	4°	84
K0695.09161	stainless steel	17,5	M16	M40x1,5	58	44	53	9	6	2,5	4°	148
K0695.09201	stainless steel	22	M20	M40x1,5	58	44	53	9	6	2,5	4°	148
K0695.09241	stainless steel	26	M24	M40x1,5	58	44	53	9	6	2,5	4°	148
K0695.10201	stainless steel	22	M20	M50x1,5	70	50	60	11	6	2,5	4°	225
K0695.10241	stainless steel	26	M24	M50x1,5	70	50	60	11	6	2,5	4°	225
K0695.10301	stainless steel	33	M30	M50x1,5	70	50	60	11	6	2,5	4°	225
K0695.12241	stainless steel	26	M24	M60x2	80	56	68	11	7	3	4°	323
K0695.12301	stainless steel	33	M30	M60x2	80	56	68	11	7	3	4°	323

Levelling sets

with locknut

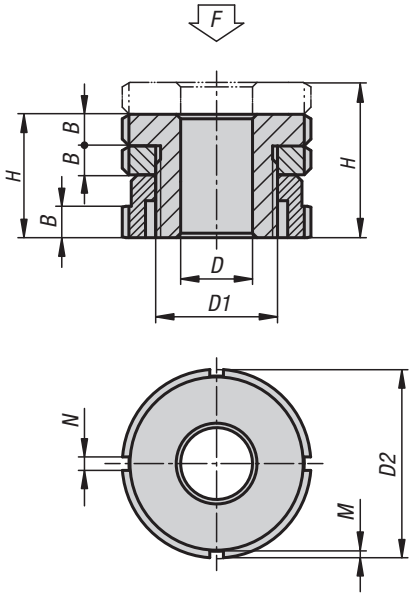

Material:
Steel 1.7225.
Stainless steel 1.4305.

Version:
Standard version trivalent blue passivated.
Stainless steel version bright.

Sample order:
K0097.0404

Note:
These low version levelling sets with locknut are used to mount and align motors, aggregates, drive units and production lines. The advantage is the low height. Alignments can be made quickly and easily even with several levelling points. Distortion-free mounting is guaranteed. The locknut secures a prescribed adjustment.

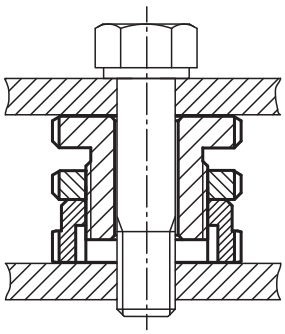

Levelling sets

with locknut

KIPP Levelling sets with locknut

Order No.	Main material	D	for screw	D1	D2	H min.	H max.	B	N	M	F kN
K0097.0404	high carbon steel	4,5	M4	M15x1	25	20	24	5	4	2	40
K0097.0405	high carbon steel	5,5	M5	M15x1	25	20	24	5	4	2	40
K0097.0406	high carbon steel	6,6	M6	M15x1	25	20	24	5	4	2	40
K0097.0506	high carbon steel	6,6	M6	M20x1	32	24	29	6	4	2	65
K0097.0508	high carbon steel	9	M8	M20x1	32	24	29	6	4	2	65
K0097.0510	high carbon steel	11	M10	M20x1	32	24	29	6	4	2	65
K0097.0710	high carbon steel	11	M10	M30x1,5	45	29	36	7	5	2	120
K0097.0712	high carbon steel	13,5	M12	M30x1,5	45	29	36	7	5	2	120
K0097.0716	high carbon steel	17,5	M16	M30x1,5	45	29	36	7	5	2	120
K0097.0916	high carbon steel	17,5	M16	M40x1,5	58	37	46	9	6	2,5	210
K0097.0920	high carbon steel	22	M20	M40x1,5	58	37	46	9	6	2,5	210
K0097.0924	high carbon steel	26	M24	M40x1,5	58	37	46	9	6	2,5	210
K0097.1020	high carbon steel	22	M20	M50x1,5	70	44	54	11	6	2,5	330
K0097.1024	high carbon steel	26	M24	M50x1,5	70	44	54	11	6	2,5	330
K0097.1030	high carbon steel	33	M30	M50x1,5	70	44	54	11	6	2,5	330
K0097.04041	stainless steel	4,5	M4	M15x1	25	20	24	5	4	2	27,1
K0097.04051	stainless steel	5,5	M5	M15x1	25	20	24	5	4	2	27,1
K0097.04061	stainless steel	6,6	M6	M15x1	25	20	24	5	4	2	27,1
K0097.05061	stainless steel	6,6	M6	M20x1	32	24	29	6	4	2	43,4
K0097.05081	stainless steel	9	M8	M20x1	32	24	29	6	4	2	43,4
K0097.05101	stainless steel	11	M10	M20x1	32	24	29	6	4	2	43,4
K0097.07101	stainless steel	11	M10	M30x1,5	45	29	36	7	5	2	84
K0097.07121	stainless steel	13,5	M12	M30x1,5	45	29	36	7	5	2	84
K0097.07161	stainless steel	17,5	M16	M30x1,5	45	29	36	7	5	2	84
K0097.09161	stainless steel	17,5	M16	M40x1,5	58	37	46	9	6	2,5	148
K0097.09201	stainless steel	22	M20	M40x1,5	58	37	46	9	6	2,5	148
K0097.09241	stainless steel	26	M24	M40x1,5	58	37	46	9	6	2,5	148
K0097.10201	stainless steel	22	M20	M50x1,5	70	44	54	11	6	2,5	225
K0097.10241	stainless steel	26	M24	M50x1,5	70	44	54	11	6	2,5	225
K0097.10301	stainless steel	33	M30	M50x1,5	70	44	54	11	6	2,5	225

Levelling sets

spherical washer with locknut

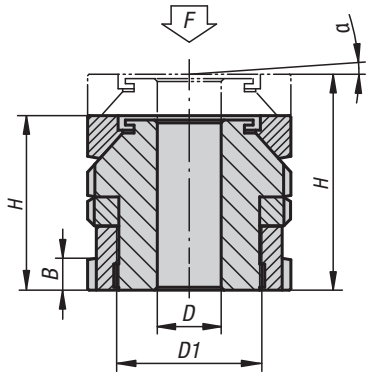

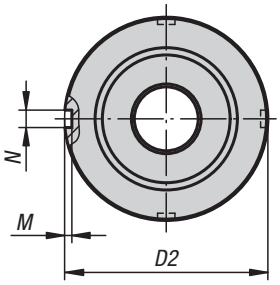

Material:
Steel 1.7225.
Stainless steel 1.4305.

Version:
Standard version trivalent blue passivated.
Stainless steel version bright.

Sample order:
K0115.0406

Note:
The spherical washer levelling set is used to mount and align motors, aggregates, drive units and production lines. The spherical washer gives exact alignment of sloping faces with an inclination of up to 4°. The locknut secures a prescribed adjustment.

Accessories:
Spherical levelling washers K0691

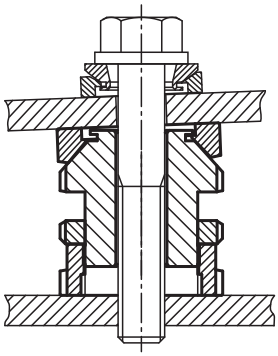

Levelling sets

spherical washer with locknut

KIPP Levelling sets spherical washer with locknut

Order No.	Main material	D	for screw	D1	D2	H min.	H max.	B	N	M	α	F kN
K0115.0406	high carbon steel	6,6	M6	M15x1	25	27	31	5	4	2	4°	40
K0115.0506	high carbon steel	6,6	M6	M20x1	32	32	37	6	4	2	4°	65
K0115.0508	high carbon steel	9	M8	M20x1	32	32	37	6	4	2	4°	65
K0115.0510	high carbon steel	11	M10	M20x1	32	32	37	6	4	2	4°	65
K0115.0710	high carbon steel	11	M10	M30x1,5	45	41	48	7	5	2	4°	120
K0115.0712	high carbon steel	13,5	M12	M30x1,5	45	41	48	7	5	2	4°	120
K0115.0716	high carbon steel	17,5	M16	M30x1,5	45	41	48	7	5	2	4°	120
K0115.0916	high carbon steel	17,5	M16	M40x1,5	58	53	62	9	6	2,5	4°	210
K0115.0920	high carbon steel	22	M20	M40x1,5	58	53	62	9	6	2,5	4°	210
K0115.0924	high carbon steel	26	M24	M40x1,5	58	53	62	9	6	2,5	4°	210
K0115.1020	high carbon steel	22	M20	M50x1,5	70	61	71	11	6	2,5	4°	330
K0115.1024	high carbon steel	26	M24	M50x1,5	70	61	71	11	6	2,5	4°	330
K0115.1030	high carbon steel	33	M30	M50x1,5	70	61	71	11	6	2,5	4°	330
K0115.1224	high carbon steel	26	M24	M60x2	80	67	79	11	7	3	4°	495
K0115.1230	high carbon steel	33	M30	M60x2	80	67	79	11	7	3	4°	495
K0115.04061	stainless steel	6,6	M6	M15x1	25	27	31	5	4	2	4°	27,1
K0115.05061	stainless steel	6,6	M6	M20x1	32	32	37	6	4	2	4°	43,4
K0115.05081	stainless steel	9	M8	M20x1	32	32	37	6	4	2	4°	43,4
K0115.05101	stainless steel	11	M10	M20x1	32	32	37	6	4	2	4°	43,4
K0115.07101	stainless steel	11	M10	M30x1,5	45	41	48	7	5	2	4°	84
K0115.07121	stainless steel	13,5	M12	M30x1,5	45	41	48	7	5	2	4°	84
K0115.07161	stainless steel	17,5	M16	M30x1,5	45	41	48	7	5	2	4°	84
K0115.09161	stainless steel	17,5	M16	M40x1,5	58	53	62	9	6	2,5	4°	148
K0115.09201	stainless steel	22	M20	M40x1,5	58	53	62	9	6	2,5	4°	148
K0115.09241	stainless steel	26	M24	M40x1,5	58	53	62	9	6	2,5	4°	148
K0115.10201	stainless steel	22	M20	M50x1,5	70	61	71	11	6	2,5	4°	225
K0115.10241	stainless steel	26	M24	M50x1,5	70	61	71	11	6	2,5	4°	225
K0115.10301	stainless steel	33	M30	M50x1,5	70	61	71	11	6	2,5	4°	225
K0115.12241	stainless steel	26	M24	M60x2	80	67	79	11	7	3	4°	323
K0115.12301	stainless steel	33	M30	M60x2	80	67	79	11	7	3	4°	323

Levelling sets

spherical washer

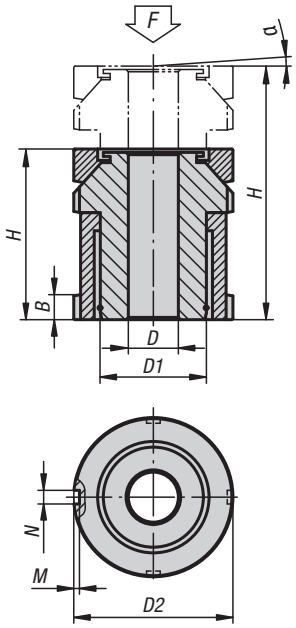

Material:
Steel 1.7225.
Stainless steel 1.4305.

Version:
Standard version trivalent blue passivated.
Stainless steel version bright.

Sample order:
K0057.1506

Note:
The spherical washer levelling sets are used to mount and align motors, aggregates, drive units and production lines. The spherical washer permits exact alignment when mounting sloping surfaces of up to 4°.
These levellers have a long travel of 15 mm to 50 mm.

Accessories:
Spherical levelling washers K0691

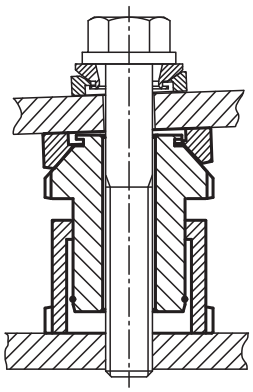

Levelling sets

spherical washer

KIPP Levelling sets spherical washer

Order No.	Main material	D	for screw	D1	D2	H min.	H max.	B	N	M	α	F kN
K0057.1506	high carbon steel	6,6	M6	M15x1	25	35	50	5	4	2	4°	40
K0057.2006	high carbon steel	6,6	M6	M20x1	32	43	63	6	4	2	4°	65
K0057.2008	high carbon steel	9	M8	M20x1	32	43	63	6	4	2	4°	65
K0057.2010	high carbon steel	11	M10	M20x1	32	43	63	6	4	2	4°	65
K0057.2510	high carbon steel	11	M10	M30x1,5	45	54	79	7	5	2	4°	120
K0057.2512	high carbon steel	13,5	M12	M30x1,5	45	54	79	7	5	2	4°	120
K0057.2516	high carbon steel	17,5	M16	M30x1,5	45	54	79	7	5	2	4°	120
K0057.3216	high carbon steel	17,5	M16	M40x1,5	58	70	102	9	6	2,5	4°	210
K0057.3220	high carbon steel	22	M20	M40x1,5	58	70	102	9	6	2,5	4°	210
K0057.3224	high carbon steel	26	M24	M40x1,5	58	70	102	9	6	2,5	4°	210
K0057.4020	high carbon steel	22	M20	M50x1,5	70	83	123	11	6	2,5	4°	330
K0057.4024	high carbon steel	26	M24	M50x1,5	70	83	123	11	6	2,5	4°	330
K0057.4030	high carbon steel	33	M30	M50x1,5	70	83	123	11	6	2,5	4°	330
K0057.5024	high carbon steel	26	M24	M60x2	80	94	144	11	7	3	4°	495
K0057.5030	high carbon steel	33	M30	M60x2	80	94	144	11	7	3	4°	495
K0057.15061	stainless steel	6,6	M6	M15x1	25	35	50	5	4	2	4°	27,1
K0057.20061	stainless steel	6,6	M6	M20x1	32	43	63	6	4	2	4°	43,4
K0057.20081	stainless steel	9	M8	M20x1	32	43	63	6	4	2	4°	43,4
K0057.20101	stainless steel	11	M10	M20x1	32	43	63	6	4	2	4°	43,4
K0057.25101	stainless steel	11	M10	M30x1,5	45	54	79	7	5	2	4°	84
K0057.25121	stainless steel	13,5	M12	M30x1,5	45	54	79	7	5	2	4°	84
K0057.25161	stainless steel	17,5	M16	M30x1,5	45	54	79	7	5	2	4°	84
K0057.32161	stainless steel	17,5	M16	M40x1,5	58	70	102	9	6	2,5	4°	148
K0057.32201	stainless steel	22	M20	M40x1,5	58	70	102	9	6	2,5	4°	148
K0057.32241	stainless steel	26	M24	M40x1,5	58	70	102	9	6	2,5	4°	148
K0057.40201	stainless steel	22	M20	M50x1,5	70	83	123	11	6	2,5	4°	225
K0057.40241	stainless steel	26	M24	M50x1,5	70	83	123	11	6	2,5	4°	225
K0057.40301	stainless steel	33	M30	M50x1,5	70	83	123	11	6	2,5	4°	225
K0057.50241	stainless steel	26	M24	M60x2	80	94	144	11	7	3	4°	323
K0057.50301	stainless steel	33	M30	M60x2	80	94	144	11	7	3	4°	323

Levelling sets

spherical washer with locknut

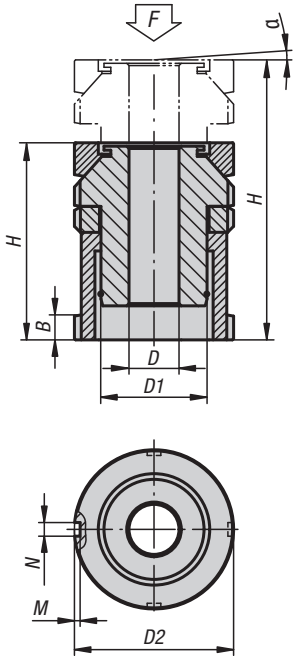

Material:
Steel 1.7225.
Stainless steel 1.4305.

Version:
Standard version trivalent blue passivated.
Stainless steel version bright.

Sample order:
K0119.1006

Note:
The spherical washer levelling sets are used to mount and align motors, aggregates, drive units and production lines. The spherical washer permits exact alignment when mounting sloping surfaces of up to 4°. The locknut secures a prescribed adjustment.
These levellers have a long travel of 10 mm to 39 mm.

Accessories:
Spherical levelling washers K0691

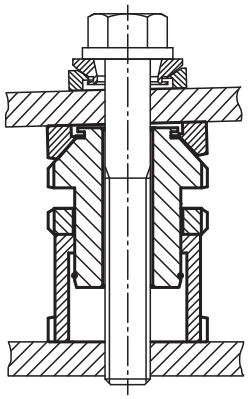

Levelling sets

spherical washer with locknut

KIPP Levelling sets spherical washer with locknut

Order No.	Main material	D	for screw	D1	D2	H min.	H max.	B	N	M	α	F kN
K0119.1006	high carbon steel	6,6	M6	M15x1	25	40	50	5	4	2	4°	40
K0119.1406	high carbon steel	6,6	M6	M20x1	32	49	63	6	4	2	4°	65
K0119.1408	high carbon steel	9	M8	M20x1	32	49	63	6	4	2	4°	65
K0119.1410	high carbon steel	11	M10	M20x1	32	49	63	6	4	2	4°	65
K0119.1810	high carbon steel	11	M10	M30x1,5	45	61	79	7	5	2	4°	120
K0119.1812	high carbon steel	13,5	M12	M30x1,5	45	61	79	7	5	2	4°	120
K0119.1816	high carbon steel	17,5	M16	M30x1,5	45	61	79	7	5	2	4°	120
K0119.2316	high carbon steel	17,5	M16	M40x1,5	58	79	102	9	6	2,5	4°	210
K0119.2320	high carbon steel	22	M20	M40x1,5	58	79	102	9	6	2,5	4°	210
K0119.2324	high carbon steel	26	M24	M40x1,5	58	79	102	9	6	2,5	4°	210
K0119.2920	high carbon steel	22	M20	M50x1,5	70	94	123	11	6	2,5	4°	330
K0119.2924	high carbon steel	26	M24	M50x1,5	70	94	123	11	6	2,5	4°	330
K0119.2930	high carbon steel	33	M30	M50x1,5	70	94	123	11	6	2,5	4°	330
K0119.3924	high carbon steel	26	M24	M60x2	80	105	144	11	7	3	4°	495
K0119.3930	high carbon steel	33	M30	M60x2	80	105	144	11	7	3	4°	495
K0119.10061	stainless steel	6,6	M6	M15x1	25	40	50	5	4	2	4°	27,1
K0119.14061	stainless steel	6,6	M6	M20x1	32	49	63	6	4	2	4°	43,4
K0119.14081	stainless steel	9	M8	M20x1	32	49	63	6	4	2	4°	43,4
K0119.14101	stainless steel	11	M10	M20x1	32	49	63	6	4	2	4°	43,4
K0119.18101	stainless steel	11	M10	M30x1,5	45	61	79	7	5	2	4°	84
K0119.18121	stainless steel	13,5	M12	M30x1,5	45	61	79	7	5	2	4°	84
K0119.18161	stainless steel	17,5	M16	M30x1,5	45	61	79	7	5	2	4°	84
K0119.23161	stainless steel	17,5	M16	M40x1,5	58	79	102	9	6	2,5	4°	148
K0119.23201	stainless steel	22	M20	M40x1,5	58	79	102	9	6	2,5	4°	148
K0119.23241	stainless steel	26	M24	M40x1,5	58	79	102	9	6	2,5	4°	148
K0119.29201	stainless steel	22	M20	M50x1,5	70	94	123	11	6	2,5	4°	225
K0119.29241	stainless steel	26	M24	M50x1,5	70	94	123	11	6	2,5	4°	225
K0119.29301	stainless steel	33	M30	M50x1,5	70	94	123	11	6	2,5	4°	225
K0119.39241	stainless steel	26	M24	M60x2	80	105	144	11	7	3	4°	323
K0119.39301	stainless steel	33	M30	M60x2	80	105	144	11	7	3	4°	323